Declaration of conformity

The product: _____

Model no.: _____

Serial no.: _____

Year of manufacture: _____

Described in the enclosed documentation is in conformity with:

- Directive 98/37/EC of 22 June 1998 relating to the *approximation of the laws of the Member States relating to machinery,* combining in a single text Directives 89/392/EEC of 14 June 1989, 91/368/EEC of 20 June 1991, 93/44/EEC of June 14, 1993 and 93/68/EEC of 22 July 1993.
- Directive 73/23/EEC of 19 February 1973 relating to electric equipment.
- Directive 89/336/EEC of 3 May 1989 relating to electromagnetic compatibility.
- Directive 93/68/EEC of 22 July 1993, amending Directive 73/23/EEC, and Directive 89/336/EEC.

Within the scope of the specifications indicated in the chapter describing the equipment with a B1 risk level. Since it is intended to form part of a set of machines which, to obtain a result, are arranged and connected to perform together, it cannot be operated until the set of machines has been declared in conformity with the applicable Directives by the person responsible for the final assembly.

*Orcoyen, on :*_____

*Signed.:*_____

Gonzalo Marco, Managing Director

MELTON
HOT MELT APPLICATIONS
A Valco Cincinnati Company

Polígono Industrial Agustinos, calle G, nave D-34

Tel.: +34.948.321.580 Fax: +34.948.326.584

31160 ORCOYEN (Navarra) SPAIN

CONTROL REGISTRATION

CONTROL #: .....
DATE: .....
ELECTRIC CHECK: ❑
CONTROL BOARD CHECK: ❑
TEMPERATURE CONTROL CHECK 150/180°C: ❑
HYDRAULIC CHECK (100 bar): ❑
PNEUMATIC CHECK: ❑

APPLICATOR **SERIAL**

GUARANTEE CARD

DISTRIBUTOR:.....
CONTACT:.....
ADRESS:.....TELEPHON.....

OEM:.....
ADDRESS:.....
TYPE:.....BRAND:.....MODEL:.....

USER:.....

CONTACT:.....

ADDRESS:.....TELEPHONE :.....

SYSTEM LOCATION:.....

DATE OF INSTALLATION: ..... GUARANTEE UNTIL: .....

APPLICATOR **SERIAL**

MELTON, S.L.U. - POLIGONO INDUSTRIAL AGUSTINOS CALLE G-34,31160 ORCOYEN, NAVARRA
TEL: 00 34 948 321580 Fax: 00 34 948 326584 e-mail: melton@melton.es http://www.meltonhotmelt.com

MELTON, S.L.U. - POLIGONO INDUSTRIAL AGUSTINOS CALLE G-34,31160 ORCOYEN, NAVARRA
TEL: 00 34 948 321580 Fax: 00 34 948 326584 e-mail: melton@melton.es http://www.meltonhotmelt.com

IMPORTANT!

THIS INSTRUCTION MANUAL SHOULD BE KEPT IN AN ACCESSIBLE PLACE KNOWN TO ALL OPERATORS AND MAINTENANCE PERSONNEL.

READ THE INSTRUCTIONS CAREFULLY BEFORE OPERATING THE MACHINE AND FOLLOW THEM WHILE THE MACHINE IS IN OPERATION.

FOLLOW THE SAFETY INSTRUCTIONS PROVIDED IN THIS MANUAL WHEN USING AND HANDLING THE MACHINE.

IF YOU FAIL TO FOLLOW THE SAFETY INSTRUCTIONS, THIS MAY GIVE RISE TO BURNS, INJURIES AND EVEN IRREVERSIBLE DAMAGE. YOU MAY ALSO DAMAGE THE EQUIPMENT OR OTHER MATERIALS.

WARNING:

If you alter the function, performance or safety aspects of the machine, replacing original parts with other similar but not identical components (substantial alterations), without the authorisation of MELTON and as specified in Directive 89/392/EEC, you will be classified as a manufacturer and therefore become liable for the alterations made.

MELTON, S.L.U. - POLIGONO INDUSTRIAL AGUSTINOS CALLE G-34,31160 ORCOYEN, NAVARRA
TEL: 00 34 948 321580 Fax: 00 34 948 326584 e-mail: melton@melton.es http://www.meltonhotmelt.com

MELTON, S.L.U. - POLIGONO INDUSTRIAL AGUSTINOS CALLE G-34,31160 ORCOYEN, NAVARRA
TEL: 00 34 948 321580 Fax: 00 34 948 326584 e-mail: melton@melton.es http://www.meltonhotmelt.com

INDEX

MELTON, S.L.U. - POLIGONO INDUSTRIAL AGUSTINOS CALLE G-34,31160 ORCOYEN, NAVARRA
TEL: 00 34 948 321580 Fax: 00 34 948 326584 e-mail: melton@melton.es http://www.meltonhotmelt.com

MELTON, S.L.U. - POLIGONO INDUSTRIAL AGUSTINOS CALLE G-34,31160 ORCOYEN, NAVARRA
TEL: 00 34 948 321580 Fax: 00 34 948 326584 e-mail: melton@melton.es http://www.meltonhotmelt.com

CHAPTER 1
SAFETY INSTRUCTIONS

MELTON, S.L.U. - POLIGONO INDUSTRIAL AGUSTINOS CALLE G-34,31160 ORCOYEN, NAVARRA
TEL: 00 34 948 321580 Fax: 00 34 948 326584 e-mail: melton@melton.es http://www.meltonhotmelt.com

1.1. SYMBOLS AND TERMS:


Miscellaneous prohibitions


Danger: hot surface


Miscellaneous precautions


Precaution: electric current


Precaution: flammable liquid


Precaution: risk of fluid leakage under high pressure


Precaution: risk of entrapment between mobile parts


European Community markings


Note of special interest


Use of goggles required


Use of safety gloves required

MELTON, S.L.U. - POLIGONO INDUSTRIAL AGUSTINOS CALLE G-34,31160 ORCOYEN, NAVARRA
TEL: 00 34 948 321580 Fax: 00 34 948 326584 e-mail: melton@melton.es http://www.meltonhotmelt.com

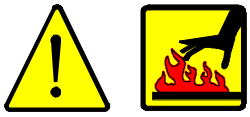

Burns:

Burns can be caused by the uncovered parts of the applicator, such as the guns or by splashes of hot melt.

The hot adhesive under pressure in the nozzles can cause serious injuries to the skin.

Qualified personnel:

This is personnel (technical staff) who has acquired sufficient know-how in a specific field, either through training or from experience.

This personnel must be familiar with safety and accident prevention standards, and have general knowledge of the technical aspects of the machine.

Protective clothing:

This clothing will be compliant with EN510 and EN340 standards, protecting against fast-moving particles and high temperatures.

It will be as tight as possible to prevent it from catching on mobile machine parts, and the sleeves, waist, legs, etc. will be adjustable to the size of the wearer.

Goggles and face shields:

They will be compliant with the EN 166 standard, protecting against fast-moving particles and high temperatures.

Goggles only protect the eyes. Face shields are therefore preferable, since they protect the entire face.

Protective gloves:

They will be compliant with EN 407 and EN 420 standards, protecting the hands against the burns caused by external thermal masses at temperatures of above 100 ℃.

MELTON, S.L.U. - POLIGONO INDUSTRIAL AGUSTINOS CALLE G-34,31160 ORCOYEN, NAVARRA
TEL: 00 34 948 321580 Fax: 00 34 948 326584 e-mail: melton@melton.es http://www.meltonhotmelt.com

1.2. PURPOSE:

This unit has been manufactured according to current safety standards.

This unit has been designed for the purpose described in chapter 2 of this manual, Description.

To use the machine correctly, follow the instructions provided in the Operating Manual, particularly:

- The machine should only be installed and used by qualified personnel, previously familiarised with the operating instructions (contacting the manufacturer whenever necessary) and the risks involved, the safety measures required, including adjustment and maintenance, and expressly forbidden operations.
- This unit has not been manufactured to operate in hazardous, explosive and/or flammable atmospheres
- When working with this machine, wear protective clothing, gloves and face shields and remove rings, bracelets and watches.
- Since the machine is designed to form part of a series of machines, arranged to work together, the hot melt applicator cannot be operated until the entire series has been declared in compliance with applicable directives.
- This machine should never work without the guards provided (which should not be removed). These guards should be checked and maintained with the specified frequency.
- Make sure that the equipment is properly grounded.
- Never operate the machine if you are aware that there is a leak in the glue circuit.
- Maintenance operations and/or repairs should be performed by personnel with basic knowledge of the machine and the mechanical, pneumatic and electric circuits involved.
- Maintenance operations and/or repairs should always be performed with the machine switched off at the mains, and with the main switch blocked.
- Maintenance operations and/or repairs should always be performed with the machine de-pressurised and disconnected from the pressure circuit.

MELTON, S.L.U. - POLIGONO INDUSTRIAL AGUSTINOS CALLE G-34,31160 ORCOYEN, NAVARRA
TEL: 00 34 948 321580 Fax: 00 34 948 326584 e-mail: melton@melton.es http://www.meltonhotmelt.com

1.3. FIRST AID:

In case of burns:

Immerse affected part in cold clean water as quickly as possible until the adhesive has cooled.

Do not attempt to remove the adhesive from the skin even when it has cooled as this may cause more serious injury.

Seek qualified medical attention immediately.

In case of an accident with the solvent:

CONTACT WITH THE SKIN: Wash with soap and water and discard all contaminated cloths.

CONTACT WITH EYES: Wash in an eye bath for at least 15 minutes.

INHALATION: In case of overexposure take patient to fresh air and let them rest.

INGESTION: Do not attempt to induce vomiting. Seek medical attention at once.

MELTON, S.L.U. - POLIGONO INDUSTRIAL AGUSTINOS CALLE G-34,31160 ORCOYEN, NAVARRA
TEL: 00 34 948 321580 Fax: 00 34 948 326584 e-mail: melton@melton.es http://www.meltonhotmelt.com

MELTON, S.L.U. - POLIGONO INDUSTRIAL AGUSTINOS CALLE G-34,31160 ORCOYEN, NAVARRA
TEL: 00 34 948 321580 Fax: 00 34 948 326584 e-mail: melton@melton.es http://www.meltonhotmelt.com

CHAPTER 2
DESCRIPTION

MELTON, S.L.U. - POLIGONO INDUSTRIAL AGUSTINOS CALLE G-34,31160 ORCOYEN, NAVARRA
TEL: 00 34 948 321580 Fax: 00 34 948 326584 e-mail: melton@melton.es http://www.meltonhotmelt.com

2.1. INTRODUCTION:

This machine heats hot-melt adhesive (or similar materials) until it goes from solid to liquid state in a heated container. A pump absorbs the glue at a certain pressure through heated hoses and transfers it to where it is applied.

2.2. MAIN PARTS:

The main parts of a series V machine are shown on the following figure:

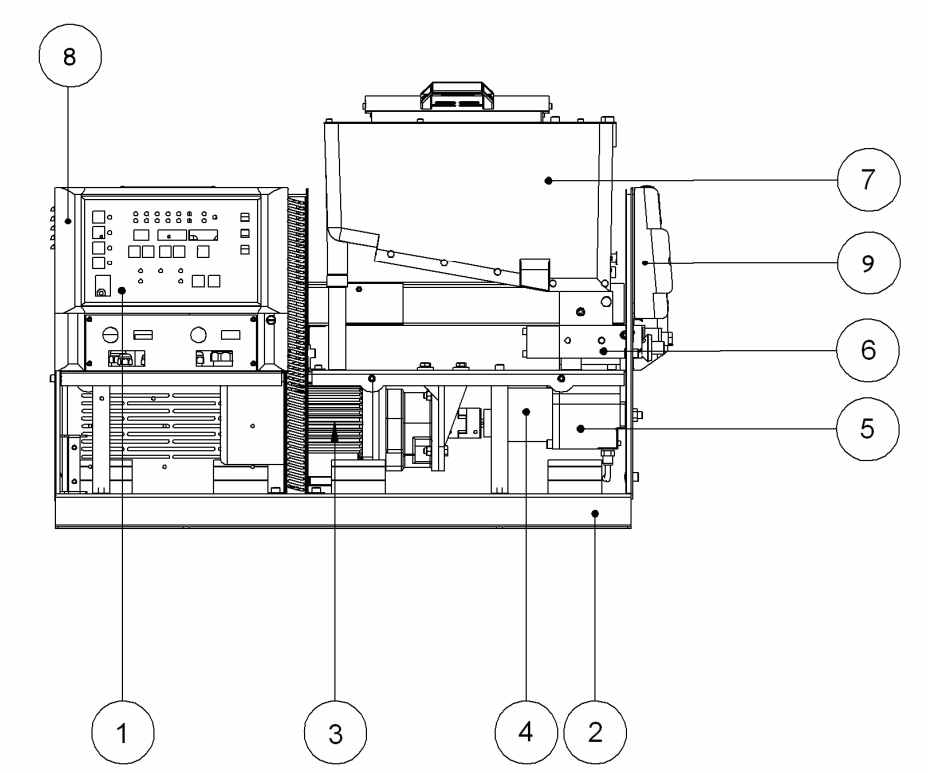

N.	DESCRIPCIÓN
1	Control panel
2	Frame
3	Motor
4	Pump
5	Pumping manifold
6	Manifold
7	Tank
8	Electric closet
9	Connexions panel

MELTON, S.L.U. - POLIGONO INDUSTRIAL AGUSTINOS CALLE G-34,31160 ORCOYEN, NAVARRA
TEL: 00 34 948 321580 Fax: 00 34 948 326584 e-mail: melton@melton.es http://www.meltonhotmelt.com

2.2.1. Frame:

It is the base on which the equipment rests.

2.2.2. Tank:

It is where the hot-melt adhesive or other similar materials are melted. They can be in pellet or block form. This tank is hermetic and it is filled with pressurised dry air to avoid that wet air from the exterior degrade the PUR material.

The aluminium tank is Teflon-coated to prevent scaling or cinders from forming. It is heated by heating elements, with temperatures controlled by a probe (PT-100 or nickel, depending on the temperature control model) from the main machine.

2.2.3. Distribution pumping system:

It consists of the following components.

Manifold**:**


This distributor carries the hot-melt to the hoses and guns. It is made out of aluminium, and installed on the bottom of the melt system. Each distributor has 2 hose connection outlets. There is also a feeding selector tap: from the PUR tank, to feed the circuit, or from the cleaning tank, to clean the circuit.

Filter**:**

The filter is an element that keeps clean the Hot Melt from dirt avoiding the dirt to reach the hoses and the gun . Filter must be change as it is showed in the correspondent chapter.

Draining valve:

The draining valve is a cleaning element the make the draining process. This process is necessary to drag small crystallizations. With the draining valve is also possible depressurize the unit.

Pumping manifold:

This element joins the pump with the main manifold. It contains a pressure valve regulator, which controls the pressure which the adhesive is pumped. It is made out of aluminium, and installed on the bottom of the melt system. It is heated by heating elements, with temperatures controlled by a probe (PT-100 or nickel, depending on the temperature control model) from the main machine.

The distributor should ONLY be removed if there is glue leakage between the tank and the distributor.

MELTON, S.L.U. - POLIGONO INDUSTRIAL AGUSTINOS CALLE G-34,31160 ORCOYEN, NAVARRA
TEL: 00 34 948 321580 Fax: 00 34 948 326584 e-mail: melton@melton.es http://www.meltonhotmelt.com

Pump**:**

The pump pushes the hot-melt or other heated product at a certain pressure from the melt system to the hoses and guns.

The pump is located on the pumping manifold and driven by an alternate current geared motor.

Pump speed is shown on the display on the front of the control cabinet.

Geared motor:

The geared motor controls the pump. It is an alternate current motor controlled by a vector frequency shifter which transmits power through a pump connection.

Motor speed can be adjusted manually or automatically, depending on the power required for the main machine, which should never exceed 100 rpm.

2.2.4. Electric system:

Except for the heating elements and motor, it is located in the electric cabinet.

The cabinet contains all the power and electronics required to run and control the machine.

2.2.5. Control panel:

The control panel, with the switches to operate and adjust the machine, is on the front of the electric cabinet.

MELTON, S.L.U. - POLIGONO INDUSTRIAL AGUSTINOS CALLE G-34,31160 ORCOYEN, NAVARRA
TEL: 00 34 948 321580 Fax: 00 34 948 326584 e-mail: melton@melton.es http://www.meltonhotmelt.com

2.3. TECHNICAL CHARACTERISTICS:

ELEMENT	*DATA*
GENERAL	
Power supply	I 220V+N+T (50/60Hz), III 220V+T (50/60 Hz), III 380V+N+T (50-60Hz)
Hoses (max.)	4
Hydraulic pressure (maximum working)	2.8 – 80 bar (40 – 1138 psi)
Melting capacity	
Noise level	63 dB
Net weight	
Working temperature	-10 – 50 ºC (32 – 122ºF) HR 20% a 80% no condensed
CONTROL	
Working programming range	30º - 240º C (104º - 464º F)
Temperature control precision	+/- 0.5º C (+/- 1º F)
Type of control	Proportional, with output at 220 V AC per triac by control of transit through zero
PUMP	
Pumping capacity	1; 2.5; 5; 8 cc/rpm
TANK	
Loading inlet	
Volume	8l,16l,30l,50l

MELTON, S.L.U. - POLIGONO INDUSTRIAL AGUSTINOS CALLE G-34,31160 ORCOYEN, NAVARRA
TEL: 00 34 948 321580 Fax: 00 34 948 326584 e-mail: melton@melton.es http://www.meltonhotmelt.com

MELTON, S.L.U. - POLIGONO INDUSTRIAL AGUSTINOS CALLE G-34,31160 ORCOYEN, NAVARRA
TEL: 00 34 948 321580 Fax: 00 34 948 326584 e-mail: melton@melton.es http://www.meltonhotmelt.com

CHAPTER 3
INSTALLATION OF THE MACHINE

MELTON, S.L.U. - POLIGONO INDUSTRIAL AGUSTINOS CALLE G-34,31160 ORCOYEN, NAVARRA
TEL: 00 34 948 321580 Fax: 00 34 948 326584 e-mail: melton@melton.es http://www.meltonhotmelt.com

3.1. INTRODUCTION:

This chapter explains how to install the machine correctly.

WARNING: The operations described in this chapter should be performed by qualified personnel, following safety instructions.

3.2. HANDLING:

The equipment is supplied palletised.

Remove the top and front covers to unpack.

Unpack carefully to prevent damage to the machine. Inspect the equipment for damages caused during transport.

3.3 INSTALLATION REQUIREMENTS:

Install the follower plate leaving enough space for the equipment to be accessed during operations.

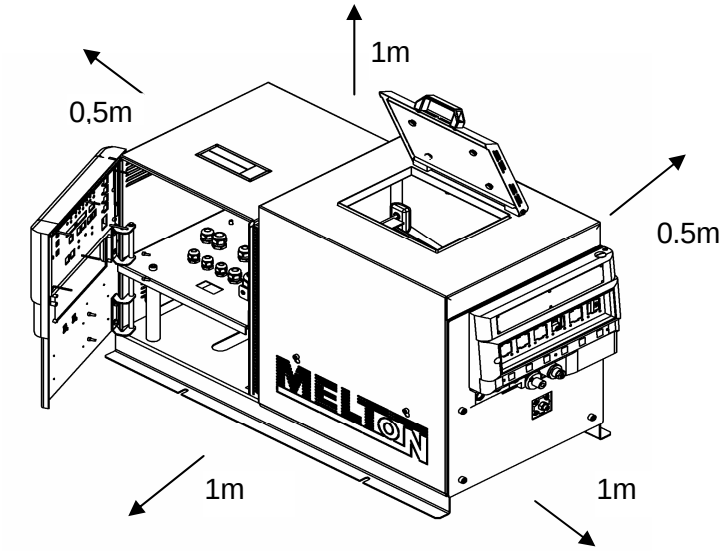

MELTON, S.L.U. - POLIGONO INDUSTRIAL AGUSTINOS CALLE G-34,31160 ORCOYEN, NAVARRA
TEL: 00 34 948 321580 Fax: 00 34 948 326584 e-mail: melton@melton.es http://www.meltonhotmelt.com

The distances are indicated for the equipment to be handled manually or by lift-truck.

Avoid extreme temperatures (below -10 ℃ and above +50 ℃).

Try to avoid installing the equipment where there are draughts. If this is not possible, the guns will need protecting because if the temperature falls rapidly they may not work properly.

3.4. MECHANICAL INSTALLATION:

The mechanical installation includes the following:

- Positioning the equipment.
- Connecting the hoses.

Positioning the equipment:

Remove the machine from the pallet with a lift-truck and position according to installation requirements (chapter 3.3)

Connecting the hoses:

Proceed as follows:

Make sure that the equipment is depressurised before connecting the hose. Set the motor control selector to zero. Heat the machine to melt any adhesive that may be present.

1º Remove the distributor cap.

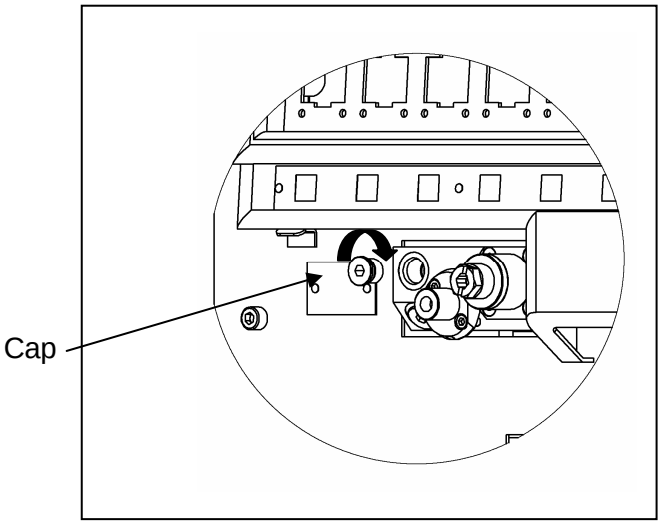

MELTON, S.L.U. - POLIGONO INDUSTRIAL AGUSTINOS CALLE G-34,31160 ORCOYEN, NAVARRA
TEL: 00 34 948 321580 Fax: 00 34 948 326584 e-mail: melton@melton.es http://www.meltonhotmelt.com

1º Screw on the male-male plug, as per hose diameter.

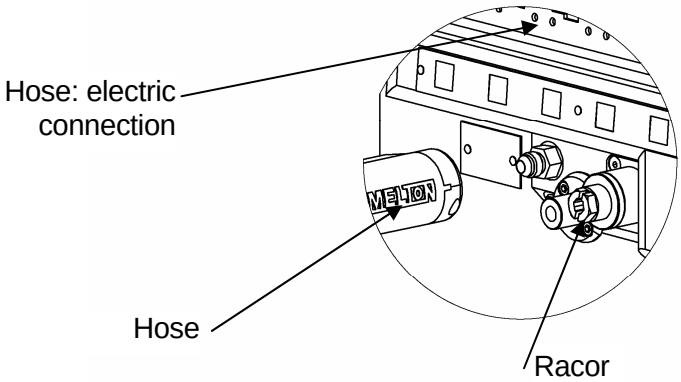

2º Screw the hose to the plug.

3º Connect the machine electrically to the electric panel.

4º When the hose is at the relevant temperature, re-tighten the male-male plugs and the hose.

MELTON, S.L.U. - POLIGONO INDUSTRIAL AGUSTINOS CALLE G-34,31160 ORCOYEN, NAVARRA
TEL: 00 34 948 321580 Fax: 00 34 948 326584 e-mail: melton@melton.es http://www.meltonhotmelt.com

Hose placement:

Never bend the hoses to angles with a radius of less than 150 mm.

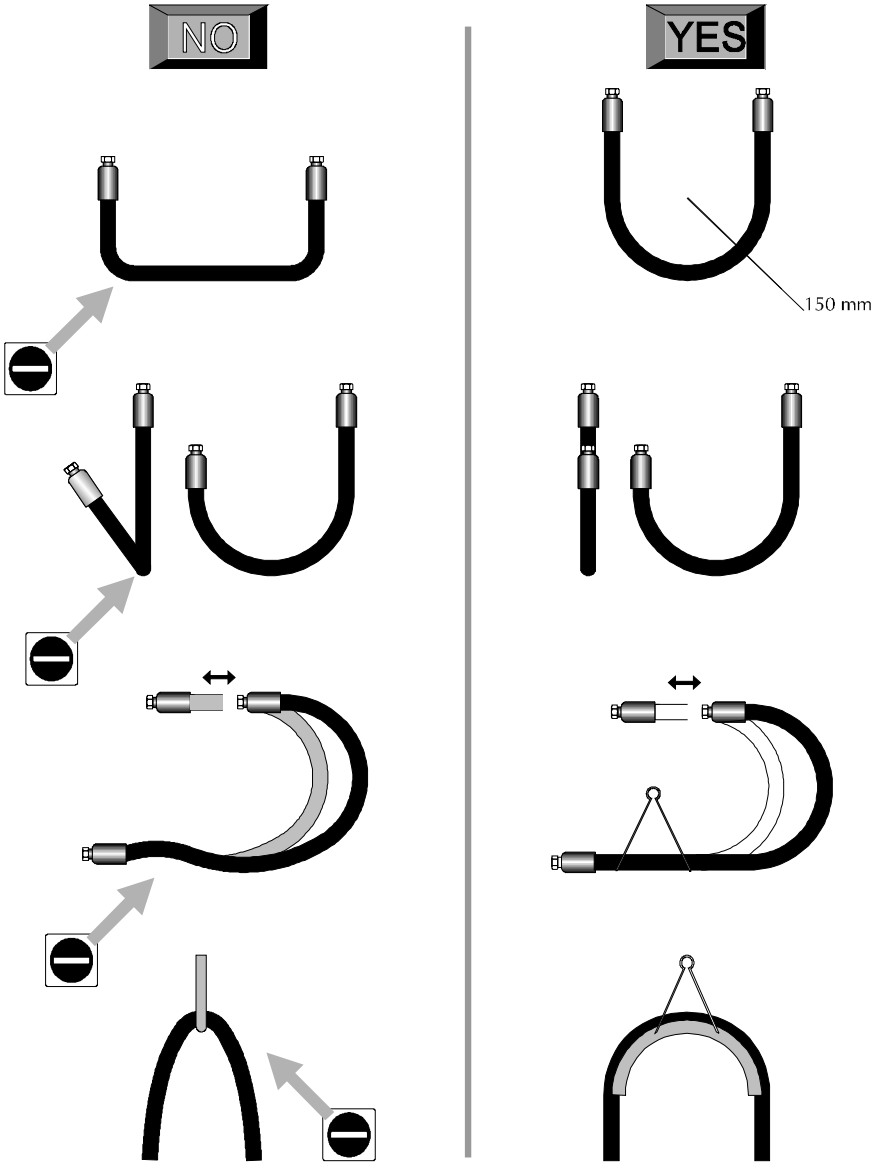

Hoses should not be allowed to lie on cold surfaces such as factory floors.

MELTON, S.L.U. - POLIGONO INDUSTRIAL AGUSTINOS CALLE G-34,31160 ORCOYEN, NAVARRA
TEL: 00 34 948 321580 Fax: 00 34 948 326584 e-mail: melton@melton.es http://www.meltonhotmelt.com

Do not bunch hoses together. Leave at least a 25 mm gap between them.

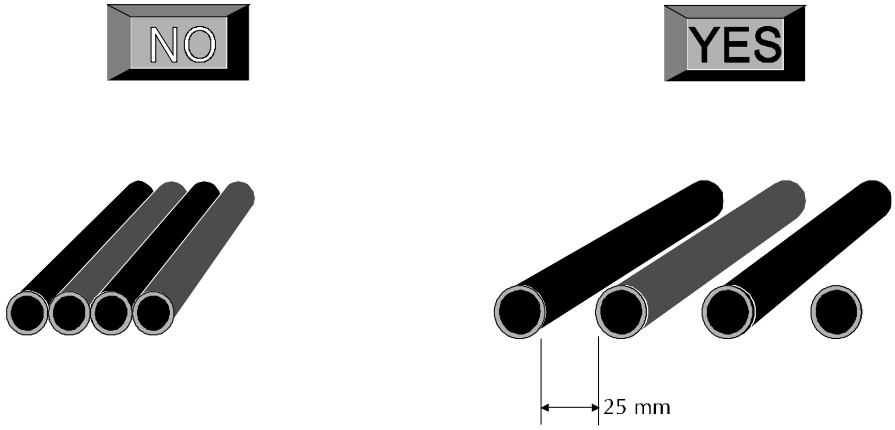

Do not cover hoses. If it is necessary to cover your hoses ensure that there are vents to allow heat to be dissipated.

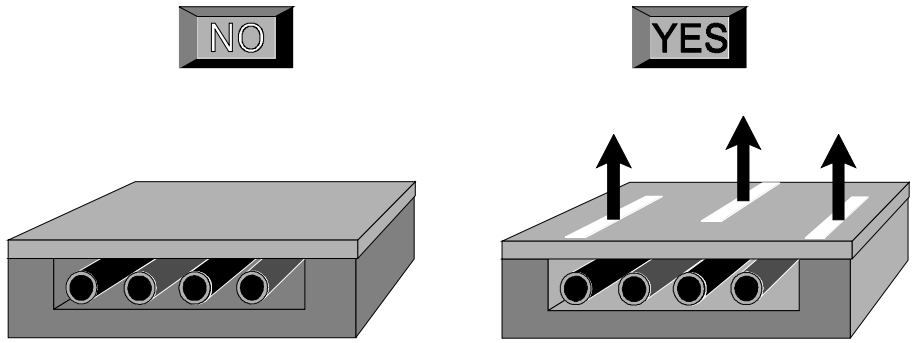

Do not install hoses with clamps smaller that the hoses.

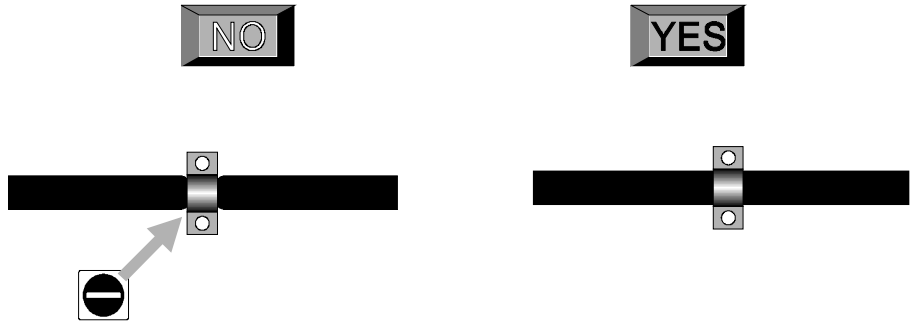

MELTON, S.L.U. - POLIGONO INDUSTRIAL AGUSTINOS CALLE G-34,31160 ORCOYEN, NAVARRA
TEL: 00 34 948 321580 Fax: 00 34 948 326584 e-mail: melton@melton.es http://www.meltonhotmelt.com

3.5. ELECTRIC INSTALLATION:

The electric installation depends on the model. See electric diagrams.

The power cord will be introduced on the unit from the bottom connecting to the electric panel through the hole.

The unit supports 220 III and 380 III + N in a installation correctly protected against indirect contacts.

In case of connecting the unit to the parent machine the stop/run signals and lineal speed must be connected to the AC drive of the motor as seen on electric diagrams.

MELTON, S.L.U. - POLIGONO INDUSTRIAL AGUSTINOS CALLE G-34,31160 ORCOYEN, NAVARRA
TEL: 00 34 948 321580 Fax: 00 34 948 326584 e-mail: melton@melton.es http://www.meltonhotmelt.com

MELTON, S.L.U. - POLIGONO INDUSTRIAL AGUSTINOS CALLE G-34,31160 ORCOYEN, NAVARRA
TEL: 00 34 948 321580 Fax: 00 34 948 326584 e-mail: melton@melton.es http://www.meltonhotmelt.com

CHAPTER 4
MACHINE ADJUSTMENT

MELTON, S.L.U. - POLIGONO INDUSTRIAL AGUSTINOS CALLE G-34,31160 ORCOYEN, NAVARRA
TEL: 00 34 948 321580 Fax: 00 34 948 326584 e-mail: melton@melton.es http://www.meltonhotmelt.com

4.1. INTRODUCTION:

The following adjustments should be made before the machine is switched on or while it is working. They will ensure that the machine works properly and safely

4.2. MOTOR CONTROL:

The system is equipped with an AC motor driven by a vector frequency converter.

The pump speed is displayed on a LCD on the front of the control cabinet. A switch will select the operation of the pump, OFF, manual or automatic.

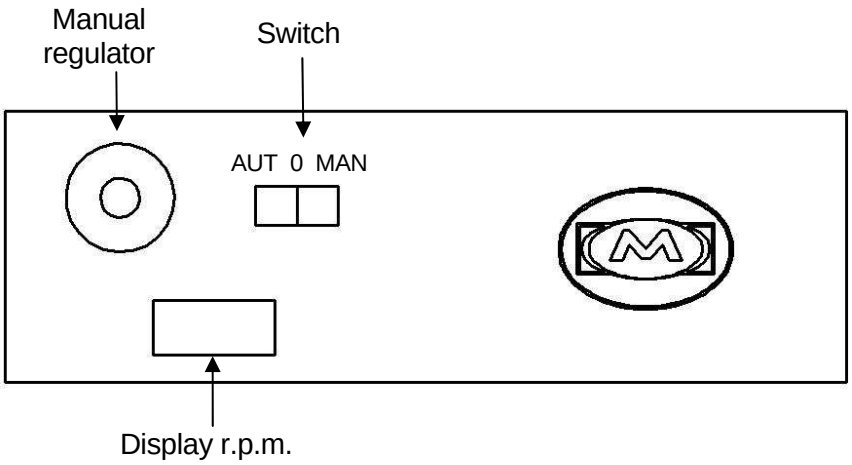

Manual Operation:

Turn the pump switch to MANUAL position. After the programmed temperature is reached and the temperature control gives the signal for starting the operation, the pump can start moving.

The required pump speed is set with the MANUAL regulator on the control cabinet door. The speed of the pump is digitally display. The maximum speed of the pump is 100 RPM.

MELTON, S.L.U. - POLIGONO INDUSTRIAL AGUSTINOS CALLE G-34,31160 ORCOYEN, NAVARRA
TEL: 00 34 948 321580 Fax: 00 34 948 326584 e-mail: melton@melton.es http://www.meltonhotmelt.com

Automatic operation:

This operation is used for varying the speed of the pump following the speed of the parent machine. A tacho generator placed on the main machine gives a voltage signal between 0 and 10V. The unit must be connected following the electric diagrams to the parent machine.

Install the tacho generator in the parent machine and connect it to the motor following the enclosed wiring diagram. The tacho generator gives a signal of 10V = 100 rpm. If the speed is higher reduce voltage with a resistance. Do not exceed a voltage of 10V.

Turn the pump switch to AUTO position.

The flow rate will change with the parent machine line speed.

If the motor tries to move off and then it's stopped, wait 10 minutes till the adhesive finishes of melting.

If lapse this time, the motor continues without stanting up; get in touch with your Melton distributor.

4.3. TEMPERATURE CONTROL:

4.3.1. Introduction:

The series V control panel is equipped with a digital electronic circuit distributed over several printed circuit cards, controlled by a micro system that includes hardware and software for the specific control of compatible gluing equipment. It is fitted with a timer for automatic switch-on and switch-off.

4.3.2. Brief description of how the unit operates:

The series V is equipped with proportional temperature control for the resistances connected to 4 double hose-gun channels and a special channel for heating the tank, with menus to access parameter programming and control of the external circuit pressure pump, operating clearance for the main machine, alarms and different operating functions (SCAN, ENERGY SAVING, etc.), which will be described later.
The control panel includes a 10-digit display with 7 ultra-bright segments showing the unit's operating data, plus the alarms that are produced by the sensor signals. There are also LEDS displaying resistance bar output status, pressure pump, overheating alarms, safety and energy saving status.

MELTON, S.L.U. - POLIGONO INDUSTRIAL AGUSTINOS CALLE G-34,31160 ORCOYEN, NAVARRA
TEL: 00 34 948 321580 Fax: 00 34 948 326584 e-mail: melton@melton.es http://www.meltonhotmelt.com

Temperature programme menu:

To pre-select the operating temperature for each hose and gun and the tank in a range between 30 and 240ºC (85-464ºF). Below 30ºC (85ºF) the device is permanently switched OFF.

T ENERGY SAVING programme menu:

To pre-select a % of the operating temperature in 3 groups.
Different percentages of the operating temperature can be selected for the tank, hoses and guns when the equipment is in ENERGY SAVING mode. Values between 70 and 90% can be selected.

General operating parameters programme menu:

To enter operating parameters (optionally, with a password) such as temperature measurement unit (ºC or ºF), clearance delay time, safety alarm temperature, temperature deviations that cause alarms, enabled options, display of operating times, etc.
There is a parameter that automatically copies the value of the temperature selected for the tank on all the output channels that are enabled (channels that are not OFF).

On/off timer programme menu:

To enter automatic switch-on and switch-off times. Up to 2 on/off time groups can be programmed for each day of the week, and the switch-over to ON, OFF or ENERGY SAVING.

Time adjustment programme menu:

To enter the current day of the week and the time on the timer.

MELTON, S.L.U. - POLIGONO INDUSTRIAL AGUSTINOS CALLE G-34,31160 ORCOYEN, NAVARRA
TEL: 00 34 948 321580 Fax: 00 34 948 326584 e-mail: melton@melton.es http://www.meltonhotmelt.com

4.3.3. Description of the control panel:

Keyboard:

The series V control panel has 11 control keys that provide access to the programme menus and general operating processes.

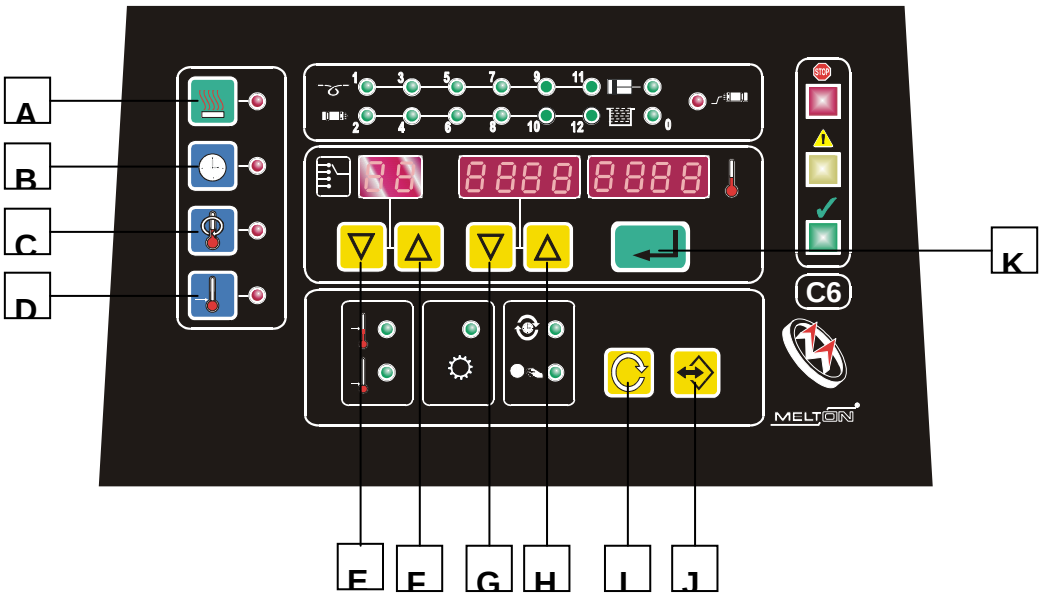

A KEY: (Heating On/Off) This key switches the equipment on or off. When it is switched on it will return to the operating mode at which it was previously switched off, either ON or ENERGY SAVING. When the equipment is switched off, the display shows the day of the week and the time, and the day of the week and time when it will automatically switch on again if the TIMER function is enabled.

B KEY: (Clock On/Off) This key switches the TIMER function on or off. With the function ON, the automatic on/off programme is enabled.

C KEY: (Scan On/Off) This key switches the SCAN function on and off. With the function on, a sequence of the SET and PRESENT temperature values of all the channels is displayed.

D KEY: (energy saving On/Off). This key is used to set the equipment on hold, with reduced electricity consumption (ENERGY SAVING), adjusting the temperature to the programmed percentage values.

E KEY: (DOWN). This key changes the display for the different devices (tank, hoses, guns). It moves from top to bottom and returns to the start of the sequence after the last value is displayed. It is used to display and programme the PRESENT and SET temperature, parameters and the timer.

MELTON, S.L.U. - POLIGONO INDUSTRIAL AGUSTINOS CALLE G-34,31160 ORCOYEN, NAVARRA
TEL: 00 34 948 321580 Fax: 00 34 948 326584 e-mail: melton@melton.es http://www.meltonhotmelt.com

F KEY: (UP selection) This key also changes the display for the different devices (tank, hoses, guns). It moves upwards and returns to the start of the sequence after the last value is displayed. It is used to display and programme the PRESENT and SET temperature, parameters and the timer.

G KEY: (DOWN data) This key changes the data from top to bottom in the different programming modes (it does not work in operating mode).

H KEY: (UP data) This key changes the data, from bottom to top, in the different programming modes (it does not work in operating mode).

I KEY: (Programming) This key moves through all the programming menus.

J KEY: (Programming) This key enters and exits the equipment parameters menu.

K KEY: (ENTER) This key is used to validate the data that has been changed in the programmes. It does not work in operating mode. To validate a programme entry, press **ENTER** until the display blinks.

Display:

The control panel has a 10-digit 7-segment display in 3 blocks.

The two digits on the left indicate the device for which the information appears in the blocks of digits further to the right.
The central 4-digit block displays the SET operating temperature and the programmed parameter values.
The 4-digit block on the right displays the PRESENT operating temperature and it is also used as a display in some programming stages.

LEDS:

ON/OFF LED: This shows that the equipment is switched on and in HEATING mode, or on hold pending key activation, or on hold pending being switched on by the timer.

TIMER LED (LED RELOJ): This shows that the TIMER function is switched on. If the light is off, the equipment will not automatically switch on or off at a previously programmed time.

SCAN LED: This shows that the SCAN function is switched on. If the light is on, the equipment will display a sequence of the temperatures of all the enabled resistances.

MELTON, S.L.U. - POLIGONO INDUSTRIAL AGUSTINOS CALLE G-34,31160 ORCOYEN, NAVARRA
TEL: 00 34 948 321580 Fax: 00 34 948 326584 e-mail: melton@melton.es http://www.meltonhotmelt.com

B.M. LED: This shows that the equipment is on ENERGY SAVING, which means that all the channels are adjusted to the programmed % of the operating temperature.

LEDS 1,3,5,7,9,11: They show that the power outputs that supply the resistances for the hot-melt hoses are switched on.

LEDS 2,4,6,8,10,12: These lights show that the power outputs to the resistances for the extrusion guns are switched on.

LED 0: This shows that the tank resistances are switched on.

LED B1: This shows that the circuit pressure pump and the external clearance relay are enabled.

STOP LED: When this light is on, it means that the equipment has been disconnected from the electric mains because there has been a serious fault in one of the measuring sensors or because the temperature of one of the heating devices has risen above the programmed safety temperature. If it flashes on and off for 2.5 minutes, it warns of a safety alarm situation or faulty sensors. If the problem is not solved in this time, the equipment will shut down.

AL LED: This is a warning that there is a device outside the correct temperature range (programmed SET ± deviation), or that a sensor is open or short-circuited.

OK LED: When this light is on, it means that the temperature of all the devices is correct and that there is no alarm situation.
If it flashes on and off, it means that the equipment is pre-heating before the pump is enabled and external clearance is given.

P.TEMP. LED: The operating temperature of the different devices is being programmed.

PBM. LED: The % values of the operating temperatures for the different devices (divided into 3 groups: tank, hoses, guns) are being programmed for adjustment in ENERGY SAVING.

P.PAR. LED: The general operating parameters are being programmed.

P.REL1. LED: The timer on/off parameters are being programmed.

P.REL2. LED: The hour and date are being set on the timer.

EXT.TRIG.LED: This shows if the equipment is receiving external glue shot impulses. The equipment goes into ENERGY SAVING if the programmed time is exceeded without glue shots.

MELTON, S.L.U. - POLIGONO INDUSTRIAL AGUSTINOS CALLE G-34,31160 ORCOYEN, NAVARRA
TEL: 00 34 948 321580 Fax: 00 34 948 326584 e-mail: melton@melton.es http://www.meltonhotmelt.com

4.3.4. Function:

ON/OFF Function:

The unit has a key for setting it in OPERATING mode (ON) or on hold (OFF), and an optional external ON/OFF signal. In operating mode, the information described is displayed on the temperature control. When the unit is on hold, the display shows the present date and the next programmed time and the date and time that the unit is to be switched on and off, if the TIMER function is enabled.

TIMER function:

The TIMER key is used to enable/disable the automatic timer function to switch the unit on and off through the timer on the electronic card. When the TIMER function is on, the unit automatically switches on and off according to the timer. When the TIMER function is off, all timer programming is cancelled.

SCAN function:

The SCAN key enables/disables the SCAN function.
This SCAN function displays a sequence of the present temperatures of all the channels that are connected. The temperatures appear every 4 seconds, and go from the bottom to the top. This function only works when the equipment is in operating mode.
In programming mode, the SCAN function is cancelled.

ENERGY SAVING function:

The series V can be set on ENERGY SAVING to obtain important energy savings in 4 different ways, by selecting the temperatures of all the devices at a programmed % of their operating value (with proportional control). The display will read as follows:

The associated pump and external clearance will be disabled and the corresponding LED will light up.
This function can be entered in four different ways:

- By pressing the  key.
- By programming the timer.
- By enabling the external ENERGY SAVING signal (OPTION).
- At the end of a programmed time in which there has been no glue shot (OPTION).

MELTON, S.L.U. - POLIGONO INDUSTRIAL AGUSTINOS CALLE G-34,31160 ORCOYEN, NAVARRA
TEL: 00 34 948 321580 Fax: 00 34 948 326584 e-mail: melton@melton.es http://www.meltonhotmelt.com

Temperature adjustment:

The control panel is designed for proportional temperature control, with parameters factory-adjusted to the heating inertia of the tank, hoses and adhesive guns. Heat inertia is greater for the tank, and therefore this temperature control range is wider than for the hoses and guns.
When the heating devices enter into the proportional range, the associated LED signals blink at a speed that depends on the rate of electricity supply.

Pump-clearance control:

The pressure pump and the associated external clearance relay (with power-free contacts) are switched on when the temperature of all the resistances (tank, hoses and guns) reaches 20ºC (36ºF) below the programmed temperature. They are switched off when any one of them reaches 25ºC (45ºF) below programmed temperature.
There is a delayed clearance parameter (P3) that provides extra heating time when the tank starts at a temperature lower than 65% of the operating temperature. Once the tank is in normal operation (including electrical faults) and does not fall below 65%, delayed clearance is inhibited.

Preheat function:

Because the heat inertia of the glue tank is much greater than for all the peripheral devices, these devices reach the programmed temperature much earlier than the tank. This rapid heating process has an ageing effect on resistances and insulation. This phenomenon also creates excessive fluid pressure in the hoses.
To offset this problem, the series V has been fitted with a preheat system that heats all the peripheral devices (hoses and guns) in a sequential manner, while the tank is heated at normal speed. When the tank reaches 75% of the programmed temperature, heat is supplied to the hoses. When the hoses reach 75% of the programmed temperature, heat is supplied to the guns.

Alarms:

The series V has several alarms, informing of faults in the measurement sensors, out-of-range temperatures or temperatures above programmed safety levels.

Temperature:

Each time that the temperature of a device goes outside the programmed ALARM MARGIN, the alarm signal will be enabled and the out-of-range temperature ALARM LED will light up.

MELTON, S.L.U. - POLIGONO INDUSTRIAL AGUSTINOS CALLE G-34,31160 ORCOYEN, NAVARRA
TEL: 00 34 948 321580 Fax: 00 34 948 326584 e-mail: melton@melton.es http://www.meltonhotmelt.com

Sensor faults:

If there is a short circuit in one of the measuring sensors, the equipment will display “CCC” instead of the temperature for the part (tank, hose, gun) involved. If an open circuit sensor fault is detected, the display will show “AAA” instead of the temperature.

When an alarm of this kind occurs and the relevant channel is on (operating temperature different from OFF), the ALARM LED will light up, the external alarm will be switched on and the STOP LED will flash on and off for 2.5 minutes. If all the problems have not been solved after 2.5 minutes, the STOP LED will remain on all the time, the outputs will be blocked (at the main switch) and the equipment will cease to function.

Filter change alarm:

We get a filter change alarm once the equipment reaches 2000 hours (P10, by default 2000 hours) of work. We can recognize this alarm when the three leds pointed below Start blinking at the same time (Red+Yellow+Green). We can reset the alarm by selecting channel P10 and push clock button.

Alarm reset process as follows:

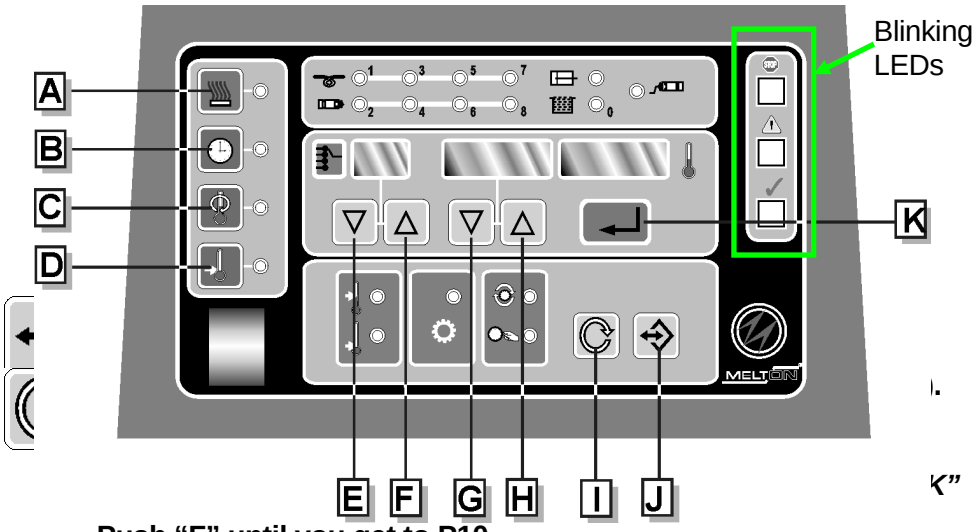

Push “F” until you get to P10.

Push “B” → The filter change alarm is now off.

Push “E” until you get to P1.

Introduce P1 = “0” + ENTER = “K”

Push “J” in order to exit the program menú.

End of filter change alarm reset process .

MELTON, S.L.U. - POLIGONO INDUSTRIAL AGUSTINOS CALLE G-34,31160 ORCOYEN, NAVARRA
TEL: 00 34 948 321580 Fax: 00 34 948 326584 e-mail: melton@melton.es http://www.meltonhotmelt.com

Safety:

Whenever a device reached the programmed safety temperature, the ALARM LED will light up, the external alarm will be switched on and the STOP LED will flash off and on for 2.5 minutes. If all the problems have not been solved after 2.5 minutes, the STOP LED will remain on all the time, the outputs will be blocked (at the main switch) and the equipment will cease to function. The display will flash on and off.
The equipment also includes a safety system with a bimetallic thermostat on the wall of the tank, adjusted to 240ºC.
When the thermostat is triggered, it will de-activate the main switch coil, disconnecting the power to the resistances but continuing to supply the control electronics, so that the control panel display can identify the device that is the source of the problem.
When the equipment is blocked like this, the sensor temperature readings are frozen and the user can check the status of each sensor.
After repairing the fault, the equipment has to be switched off and on again.

Connexions with the main machine:

Permission to the Exterior:

This potential free contact, opens when the equipment is ready to work.

Alarm indication:

This potential free contact closes when the control connects the alarm led.

Security stop indication:

This potential free contact closes when the control connects the stop led.

MELTON, S.L.U. - POLIGONO INDUSTRIAL AGUSTINOS CALLE G-34,31160 ORCOYEN, NAVARRA
TEL: 00 34 948 321580 Fax: 00 34 948 326584 e-mail: melton@melton.es http://www.meltonhotmelt.com

4.3.5. Setting equipment parameters:

To programme operating parameters, press the button on the control panel, and then press the button to select the required programme menu.

To end the process, press again.

Programming operating temperatures:

To enter this programme, press button until led is lit.
The two digits on the left show the code of the channel to be programmed. Select the channel by pressing the buttons under these digits.
The digits in the centre show the value of the programmed temperature. Use the keys under them to vary the temperature between 30 and 240ºC (85 and 464ºF).
When the minimum value is reached, the display will show OFF, which means that the channel is disabled.
By pressing the key until the display flashes, the operating temperature displayed are saved
The channels are identified by the following codes:

t0	Tank
** **t1**	OUTLET 1 hose
t2	*OUTLET 1 gun*
t3	OUTLET 2 hose
t4	OUTLET 2 gun
t5	OUTLET 3 hose
t6	OUTLET 3 gun
t7	OUTLET 4 hose
t8	OUTLET 4 gun
t9	OUTLET 5 hose
10	OUTLET 5 gun
11	OUTLET 6 hose
12	OUTLET 6 gun

**If the machine has cleaner tank, it is connected to the hose-gun plug 1 and it is enabled with the gun channel (t2).

MELTON, S.L.U. - POLIGONO INDUSTRIAL AGUSTINOS CALLE G-34,31160 ORCOYEN, NAVARRA
TEL: 00 34 948 321580 Fax: 00 34 948 326584 e-mail: melton@melton.es http://www.meltonhotmelt.com

Programming ENERGY SAVING:

To enter this programme, press button . Button until led is lit.
The two digits on the left show the code of the output to be programmed, which is selected by pressing the keys under them. 3 groups can be selected:

b0	Tank
b1	Hoses
b2	Guns

The digits in the centre show the % of the operating temperature that will be used as the adjustment value for ENERGY SAVING. The keys under these digits change the temperature value between 50 and 80%.

Pressing the key until the display flashes, we will save the % of temperature displayed.

Programming operating parameters:

Press button. until the led is lit.
The two digits on the left show the code of the parameter to be programmed, which is selected by pressing the keys under these digits.
The digits in the centre, and also the digits on the right, will show the value of the parameter. Press the keys under these digits to alter the values within the ranges specified in Table 1.

Pressing the key until the display flashes, the operating parameter displayed is saved.

MELTON, S.L.U. - POLIGONO INDUSTRIAL AGUSTINOS CALLE G-34,31160 ORCOYEN, NAVARRA
TEL: 00 34 948 321580 Fax: 00 34 948 326584 e-mail: melton@melton.es http://www.meltonhotmelt.com

Table 1. General parameter codes (standard default values in brackets):

	Name	***Description/purpose***
P0	Enter password (123)	To enter the access code in order to change the other parameters. If the correct password is not entered, the equipment displays the information, but it cannot be altered.
P1	Select password (1).	If 0 is entered, the password status is cancelled.
P2	Measurement unit (0)	Selects the measurement unit. 0 = ºC and 1 = ºF.
P3	Clearance delay (15)	Delay in minutes for switching on the pump and giving clearance after pre-heating. Values between 0 and 60 minutes.
P4	Safety alarm temperature (220ºC/428ºF).	This temperature must be above maximum operating temperature. Values can be adjusted between 80 and 240ºC (176 and 464 ºF).
P5	Tank alarm deviation (5ºC/9ºF).	Any sensor that reaches a temperature higher or lower than operating temperature +/- deviation, will switch on the temperature warning lamp and the relevant external alarm. Values can be adjusted between 1 and 30ºC (2 and 54ºF).
P6	Hose alarm deviation (5ºC/9ºF).	Any sensor that reaches a temperature higher or lower than operating temperature +/- deviation will turn on the temperature warning lamp and the relevant external alarm. Values can be adjusted between 1 and 30ºC (2 and 54ºF).
P7	Gun alarm deviation (5ºC/9ºF).	Any sensor that reaches a temperature higher or lower than operating temperature +/- deviation will turn on the temperature warning lamp and the relevant external alarm. Values can be adjusted between 1 and 30ºC (2 and 54ºF).
P8	Time after last signal (0) to go into ENERGY SAVING.	If the selected time (between 0 and 120 minutes) is exceeded with no shot pulses, the equipment will go into ENERGY SAVING mode. A 0 value switches off this function **(I/O CARD REQUIRED).**
P9	Time counter	Displays the time (hours) that the equipment has been operating.
10	Copy temperatures	This copies the operating temperature selected for the tank for all the hoses and guns that are enabled. This function rapidly programmes the equipment's SET operating values.
11	Able/disable the 1 hose-gun channel (0)	Let the use of the 1 channel, P11 =1. [0,1]
12	Able/disable the 2 hose-gun channel (0)	Let the use of the 2 channel, P12 =1. [0,1]
13	Able/disable the 3 hose-gun channel (0)	Let the use of the 3 channel, P13 =1. [0,1]
14	Able/disable the 4 hose-gun channel (0)	Let the use of the 4 channel, P14 =1. [0,1]

MELTON, S.L.U. - POLIGONO INDUSTRIAL AGUSTINOS CALLE G-34,31160 ORCOYEN, NAVARRA
TEL: 00 34 948 321580 Fax: 00 34 948 326584 e-mail: melton@melton.es http://www.meltonhotmelt.com

Table 1. General parameter codes (standard default values in brackets). (Cont.)

	Name	*Description*
15	Able/disable the 5 hose-gun channel (0)	Let the use of the 5 channel, P15 =1. [0,1] **(ONLY IN THE 6 OUTPUTS CARD)**
16	Able/disable the 6 hose-gun channel (0)	Let the use of the 6 channel, P16 =1. [0,1] **(ONLY IN THE 6 OUTPUTS CARD)**
17	Card node number (0)	Identify the node number for communications. (4 and 6 outputs)
18	I/O configurable parameter With -1 (0 disabled)	I/O configurable functions. [0,9] **(I/O CARD REQUIRED))**
19	I/O configurable parameter With -2 (0 disabled)	I/O configurable functions. [0,9] **(I/O CARD REQUIRED))**
20	I/O configurable parameter With -3 (0 disabled)	I/O configurable functions. [0,9] **(I/O CARD REQUIRED))**
21	I/O configurable parameter With -1D (0 disabled)	I/O configurable functions. [0,9] **(I/O CARD REQUIRED))**
22	I/O configurable parameter With -2D (0 disabled)	I/O configurable functions. [0,9] **(I/O CARD REQUIRED))**
23	I/O configurable parameter With -3D (0 disabled)	I/O configurable functions. [0,9] **(I/O CARD REQUIRED))**
24	I/O configurable parameter With -4D (0 disabled)	I/O configurable functions. [0,9] **(I/O CARD REQUIRED))**
25	I/O configurable parameter With -5D (0 disabled)	I/O configurable functions. [0,9] **(I/O CARD REQUIRED))**
26	I/O configurable parameter With -6D (0 disabled)	I/O configurable functions. [0,9] **(I/O CARD REQUIRED))**

MELTON, S.L.U. - POLIGONO INDUSTRIAL AGUSTINOS CALLE G-34,31160 ORCOYEN, NAVARRA
TEL: 00 34 948 321580 Fax: 00 34 948 326584 e-mail: melton@melton.es http://www.meltonhotmelt.com

Programming the timer switch on/off data:

To enter this programme, select the icon.
The two digits on the left show the code that represents the day of the week (with values from 1 to 7). The digits in the centre show the code of the parameter to be programmed, which is selected by the E and F keys ( )
The digits on the right show the value of the parameter. Keys G and H ( ) alter these values, within the ranges specified in Table 2.
By pressing the until the display flashes, the information on display is saved.

Table 2. Codes of the timer switch on/off parameters

d1	**01**	**XX**	Switch-on 1 time (hour) (Monday)
d1	**02**	**XX**	Switch-one 1 time (minute) (Monday)
d1	**03**	**XX**	Type of switch-on 1 (Monday)
d1	**04**	**XX**	Switch-off 1 time (hour) (Monday)
d1	**05**	**XX**	Switch-off 1 time (minute) (Monday)
d1	**06**	**XX**	Type of switch-off 1 (Monday)
d1	**07**	**XX**	Switch-on 2 time (hour) (Monday)
d1	**08**	**XX**	Switch-on 2 time (minute) (Monday)
d1	**09**	**XX**	Type of switch-on 2 (Monday)
d1	**10**	**XX**	Switch-off 2 time (hour) (Monday)
d1	**11**	**XX**	Switch-off time 2 (minute) (Monday)
d1	**12**	**XX**	Type of switch-off 2 (Monday)

This same table is valid for every day of the week.

MELTON, S.L.U. - POLIGONO INDUSTRIAL AGUSTINOS CALLE G-34,31160 ORCOYEN, NAVARRA
TEL: 00 34 948 321580 Fax: 00 34 948 326584 e-mail: melton@melton.es http://www.meltonhotmelt.com

The TYPE parameter has the following functions:
For switch-on:

TYPE=0	Switch-on selection not active
TYPE=1	The equipment goes from its present status to normal OPERATION
TYPE=2	The equipment goes from OFF to LOW MAINT.

For switch-off:

TYPE=0	Switch-off selection not active
TYPE=1	The equipment goes from its present status to OFF
TYPE=2	The equipment goes from its present status to LOW MAINT.

For easy programming, by pressing the key when the first parameter of the day is in position, the 12 data of the programme for Monday are copied to the day for which the key is pressed.

Setting the timer on the present date and time:

To enter this programme, select the icon.
The two digits on the left show the code of the data to be programmes, which is selected by pressing the keys under these digits.
The digits in the centre show the present day and time according to the timer. These values are altered by pressing the keys under these digits.
By pressing the key until the display flashes, we can save this information.
Identification codes:

r1	Day of the week (1 to 7)
r2	Present time (hour) (0 to 23)
r3	Present time (minute) (0 to 59)

MELTON, S.L.U. - POLIGONO INDUSTRIAL AGUSTINOS CALLE G-34,31160 ORCOYEN, NAVARRA
TEL: 00 34 948 321580 Fax: 00 34 948 326584 e-mail: melton@melton.es http://www.meltonhotmelt.com

4.6. OUTPUT PRESSURE ADJUSTMENT:

The output pressure of the adhesive is controlled by the regulator installed on the distributor. Turn the regulator stud with an Allen key to obtain the required application pressure.

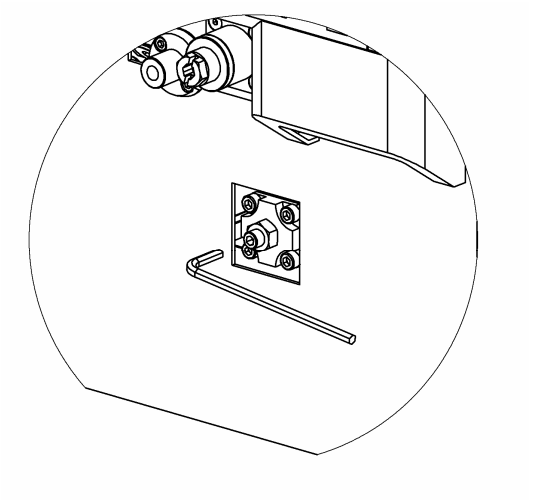

MELTON, S.L.U. - POLIGONO INDUSTRIAL AGUSTINOS CALLE G-34,31160 ORCOYEN, NAVARRA
TEL: 00 34 948 321580 Fax: 00 34 948 326584 e-mail: melton@melton.es http://www.meltonhotmelt.com

CHAPTER 5
OPERATION

MELTON, S.L.U. - POLIGONO INDUSTRIAL AGUSTINOS CALLE G-34,31160 ORCOYEN, NAVARRA
TEL: 00 34 948 321580 Fax: 00 34 948 326584 e-mail: melton@melton.es http://www.meltonhotmelt.com

WARNING: This equipment should only be used by qualified personnel who understand all the procedures and are familiar with the necessary safety measures.

5.1. INTRODUCTION:

This chapter explains how to use the equipment.

First of all, make sure that the person operating the machine is duly protected and that all safety instructions are followed. All safety equipment should be in perfect condition.

5.2. SWITCH ON:

1º Close the tank and the external cover.

2º Press the on button.

3º Check that the equipment adjustments are the desired, readjust them in other case

4º When the machine is with the working temperature and there are not alarms, the service relay is on.

5º The machine is then ready for working.

5.3. SHUT-DOWNS:

Pump shut-down:

Set the motor selector to 0 to shut down the pump.

The temperature control will maintain the temperature of the equipment.

If this shut-.down is to last for some time, we recommend switching on the Low Maintenance function (see point D of chapter 4.3.)

Stop all:

With the On/Off button on the control board the machine is connected or disconnected.

MELTON, S.L.U. - POLIGONO INDUSTRIAL AGUSTINOS CALLE G-34,31160 ORCOYEN, NAVARRA
TEL: 00 34 948 321580 Fax: 00 34 948 326584 e-mail: melton@melton.es http://www.meltonhotmelt.com

CHAPTER 6
MAINTENANCE

MELTON, S.L.U. - POLIGONO INDUSTRIAL AGUSTINOS CALLE G-34,31160 ORCOYEN, NAVARRA
TEL: 00 34 948 321580 Fax: 00 34 948 326584 e-mail: melton@melton.es http://www.meltonhotmelt.com

WARNING: The maintenance operations described in this chapter should only be performed by qualified personnel understanding the processes and familiar with the safety measures involved.

6.1. INTRODUCTION:

This chapter contains the procedures involved in the maintenance of the follower plate. These maintenance procedures guarantee safe operations and increase the life of the follower plate. Before starting a maintenance operation, carefully read chapter 1. Safety.

First of all, make sure that you are duly protected and follow all pertinent safety measures:

1º Switch off the air at the mains.

2º Switch off the main switch.

3º Make sure that the power is off.

4º Follow all applicable safety standards.

MELTON, S.L.U. - POLIGONO INDUSTRIAL AGUSTINOS CALLE G-34,31160 ORCOYEN, NAVARRA
TEL: 00 34 948 321580 Fax: 00 34 948 326584 e-mail: melton@melton.es http://www.meltonhotmelt.com

6.2. MAINTENANCE RECOMMENDATION:

The following table shows the frequency with which maintenance operations should be performed:

Frequency	Maintenance
As required	**Change the distributor filter cartridge and gaskets**
Weekly (40 hours)	Clean the outer surface of the machine. Use a liquid cleaner as recommended by the manufacturer of the adhesive used.
	Inspect all the electric, pneumatic and hydraulic connections. Replace or repair whenever necessary
	Inspect the pressure valve.
	Do the draining process
6 months (2000 hours)	Change the dryer filters.
	Clean the tank grid

6.3. MAINTENANCE PROCESSES::

6.3.1 Introduction:

You need an Allen key to access the inside of the machine.

1º Loose the 4 screws (not take off) with an Allen key on the two laterals.

MELTON, S.L.U. - POLIGONO INDUSTRIAL AGUSTINOS CALLE G-34,31160 ORCOYEN, NAVARRA
TEL: 00 34 948 321580 Fax: 00 34 948 326584 e-mail: melton@melton.es http://www.meltonhotmelt.com

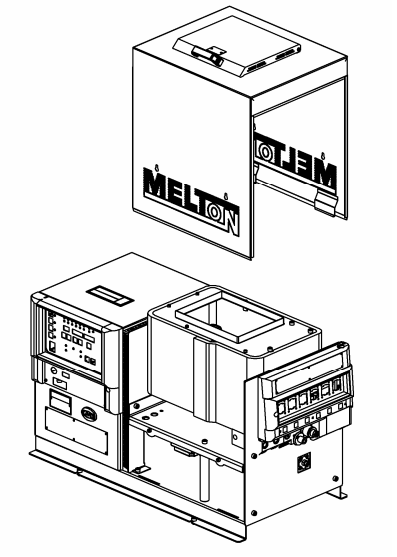

MELTON, S.L.U. - POLIGONO INDUSTRIAL AGUSTINOS CALLE G-34,31160 ORCOYEN, NAVARRA
TEL: 00 34 948 321580 Fax: 00 34 948 326584 e-mail: melton@melton.es http://www.meltonhotmelt.com

2º Push up and open the laterals of the central cover.

3º Loose the 4 screws of the frontal cover and push it up.

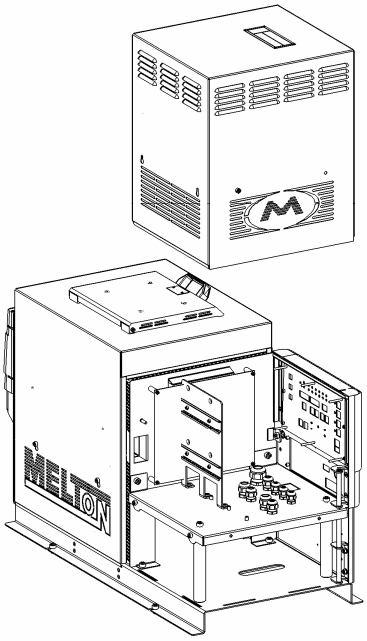

4º Remove the screws of the cleaning tank cover and push it up.

Now the machine interior is accessible.

6.3.2 Cleaning the equipment:

Vacuum or remove glue remains with a soft cloth.

Clean the control panel periodically with a soft cloth. Do not use solvents on the panel, since they could rust the controls.

If you use a cleaning agent, make sure that it is compatible with the adhesive being employed.

When in doubt, contact the adhesive manufacturer.

6.3.3. Motor

Remove dust from the motor ventilation cover with a cloth.

Oil the reducer following the manufacturer's recommendations.

6.3.4. Cleaning the tank grid:

.

MELTON, S.L.U. - POLIGONO INDUSTRIAL AGUSTINOS CALLE G-34,31160 ORCOYEN, NAVARRA
TEL: 00 34 948 321580 Fax: 00 34 948 326584 e-mail: melton@melton.es http://www.meltonhotmelt.com

. Before cleaning the tank grid, wear a face shield, gloves and long sleeves to prevent possible burns caused by splashes of hot glue

1º Heat the equipment until reach working temperature.

2º Stop the motor.

3º Place a container beneath the tank to collect the glue.

4º Open the valve.

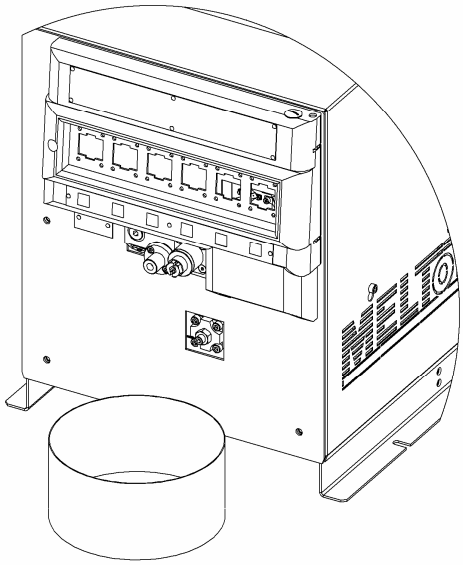

5º Start the motor

6º Speed up until the motor until the adhesive gets out of the unit .

7º Shut down the unit.

8º Close the valve

9º Set the motor speed to working speed.

6.3.5. Change the filter:

. Before cleaning the tank grid, wear a face shield, gloves and long sleeves to prevent possible burns caused by splashes of hot glue

If you use a cleaning agent, make sure that it is compatible with the adhesive employed.

MELTON, S.L.U. - POLIGONO INDUSTRIAL AGUSTINOS CALLE G-34,31160 ORCOYEN, NAVARRA
TEL: 00 34 948 321580 Fax: 00 34 948 326584 e-mail: melton@melton.es http://www.meltonhotmelt.com

If in doubt, contact the adhesive manufacturer.

1º To change the filter the applicator should be at working temperature.

2º Reduce the air pressure in the applicator to "0".

3º Place a receptacle below to collect the adhesive that is in the manifold.

4º Open the draining valve with a screwdriver, to eliminate residual pressure.

5º Open the filter plug screw with a screwdriver and take out the filter unit.

6º Loosen the filter screen screw with an allen key and the filter screen, and the filter mount will be freed.

7º Once the filter has been disassembled, we recommend changing the viton o'rings and the filter screen.

8º Assemble the viton o'rings on the filter plug and the filter screen and introduce the filter mount of the filter. Screw the unit into the filter unit.

9º Introduce the filter in the manifold and screw it in with a screwdriver.

10º Close the draining valve with a screwdriver.

11º Put in the right working pressure.

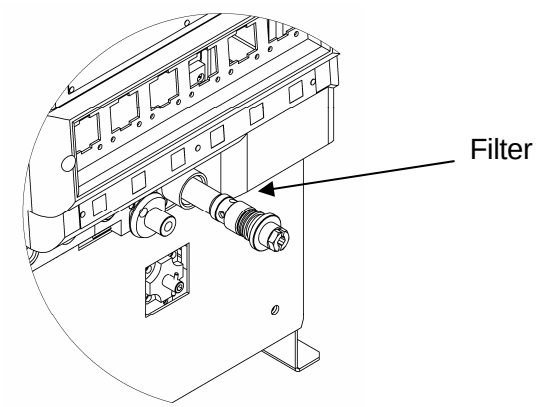

MELTON, S.L.U. - POLIGONO INDUSTRIAL AGUSTINOS CALLE G-34,31160 ORCOYEN, NAVARRA
TEL: 00 34 948 321580 Fax: 00 34 948 326584 e-mail: melton@melton.es http://www.meltonhotmelt.com

MELTON, S.L.U. - POLIGONO INDUSTRIAL AGUSTINOS CALLE G-34,31160 ORCOYEN, NAVARRA
TEL: 00 34 948 321580 Fax: 00 34 948 326584 e-mail: melton@melton.es http://www.meltonhotmelt.com

CHAPTER 7
EQUIPMENT REPAIR GUIDE

MELTON, S.L.U. - POLIGONO INDUSTRIAL AGUSTINOS CALLE G-34,31160 ORCOYEN, NAVARRA
TEL: 00 34 948 321580 Fax: 00 34 948 326584 e-mail: melton@melton.es http://www.meltonhotmelt.com

WARNING: The maintenance operations described in this chapter should only be performed by qualified personnel understanding the processes and familiar with the safety measures involved.

7.1. INTRODUCTION:

This chapter refers to the most common faults in your equipment.

Breakdowns occur when the flow of glue is reduced or stops, or the alert system informs of a fault. Try to solve the problem with the help of this manual.

If the problem cannot be solved with the information provided here, contact your Melton representative.

7.2. MECHANICAL FAULTS:

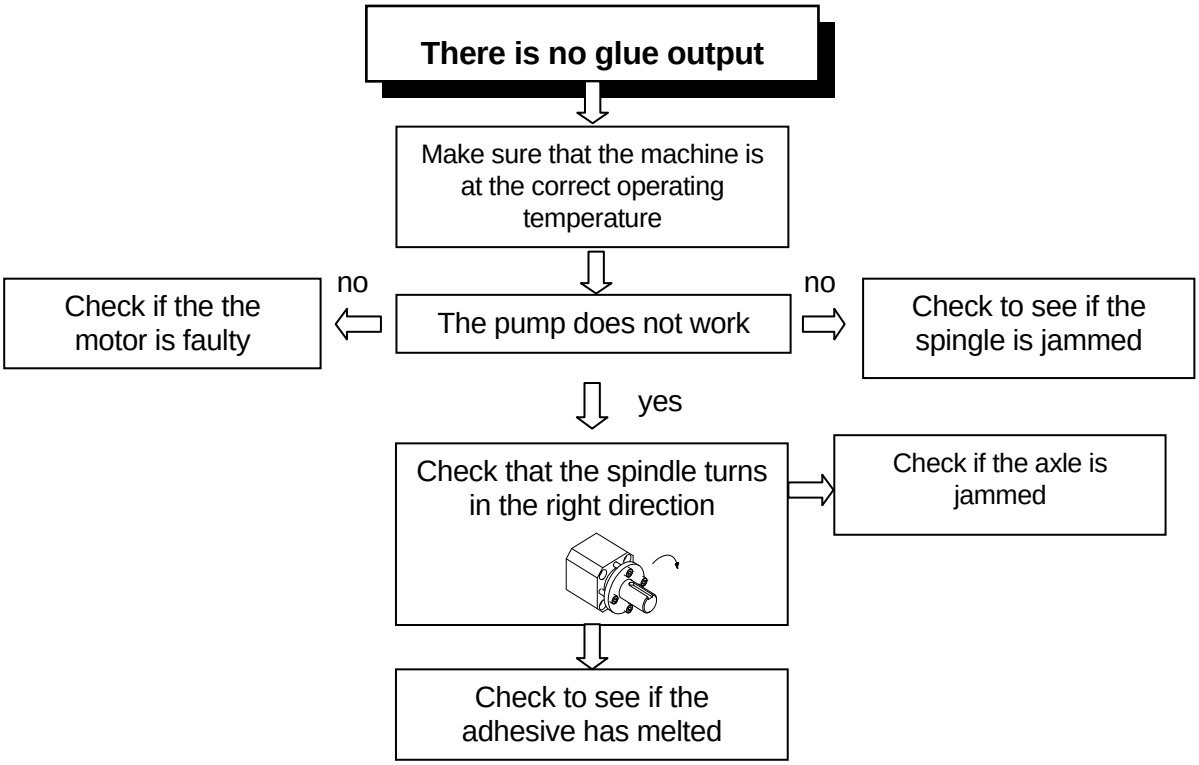

MELTON, S.L.U. - POLIGONO INDUSTRIAL AGUSTINOS CALLE G-34,31160 ORCOYEN, NAVARRA
TEL: 00 34 948 321580 Fax: 00 34 948 326584 e-mail: melton@melton.es http://www.meltonhotmelt.com

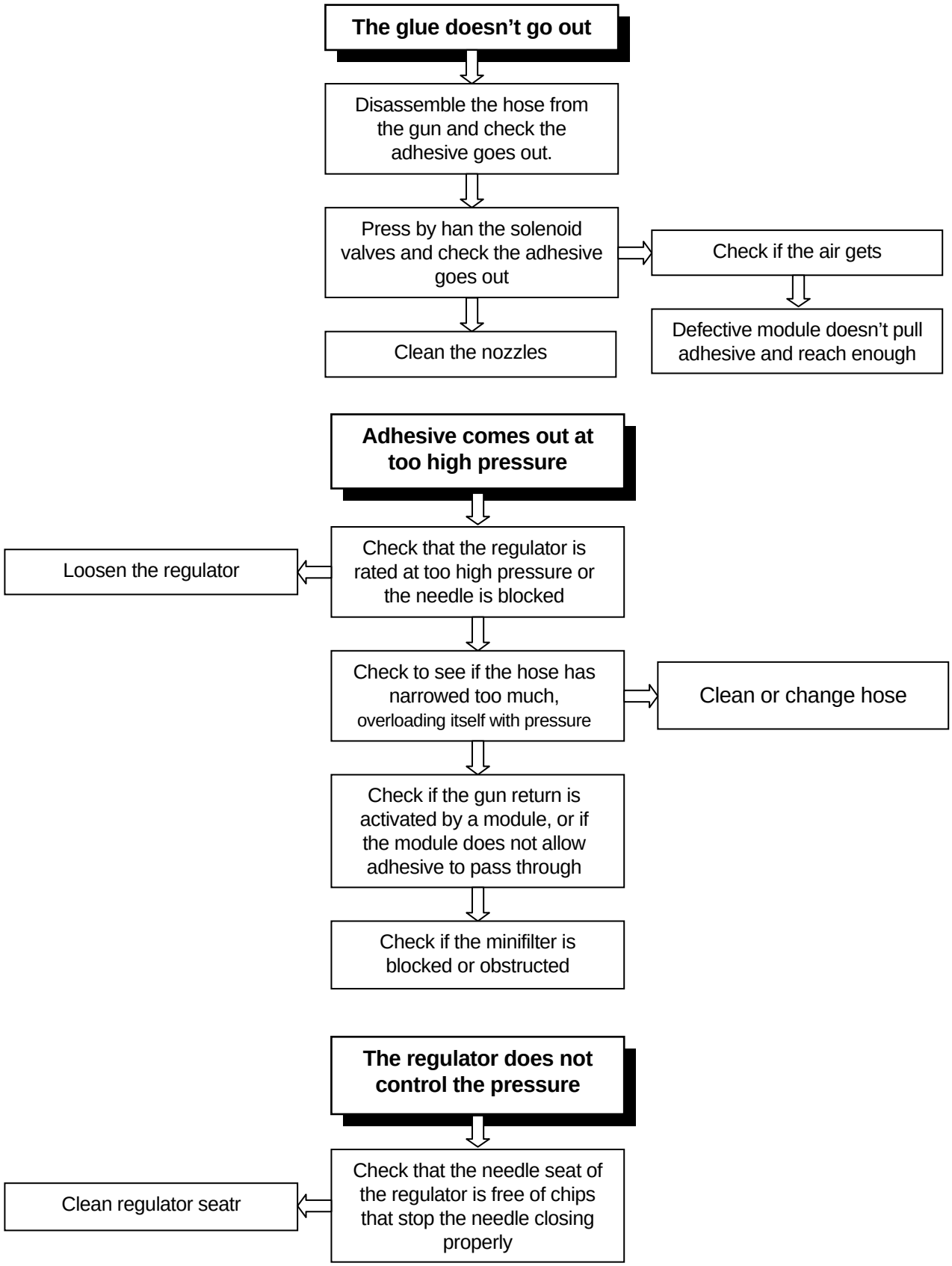

MELTON, S.L.U. - POLIGONO INDUSTRIAL AGUSTINOS CALLE G-34,31160 ORCOYEN, NAVARRA
TEL: 00 34 948 321580 Fax: 00 34 948 326584 e-mail: melton@melton.es http://www.meltonhotmelt.com

7.3. ELECTRICAL FAULTS:

Differential on the card that supplies energy to the gluer trips

↓

Check electrical leakage in applicator resistance and peripherals

↓

Check that the differential is the right one for the power requirement of the gluer

The machine does not come on

↓

Check the connection of the power supply to the

↓

Check the power fuses of the electronic card

The machine comes on but is not enabled

↓

Check correct programming and parameterising of the

↓

Check safety thermostat

The tank overheats

↓

Check the temperature sensor in the tank

↓

Check if the triac of the tank is short-circuited

↓

Check that the electronic card works properly → Check the programmed temperature of the tank

MELTON, S.L.U. - POLIGONO INDUSTRIAL AGUSTINOS CALLE G-34,31160 ORCOYEN, NAVARRA
TEL: 00 34 948 321580 Fax: 00 34 948 326584 e-mail: melton@melton.es http://www.meltonhotmelt.com

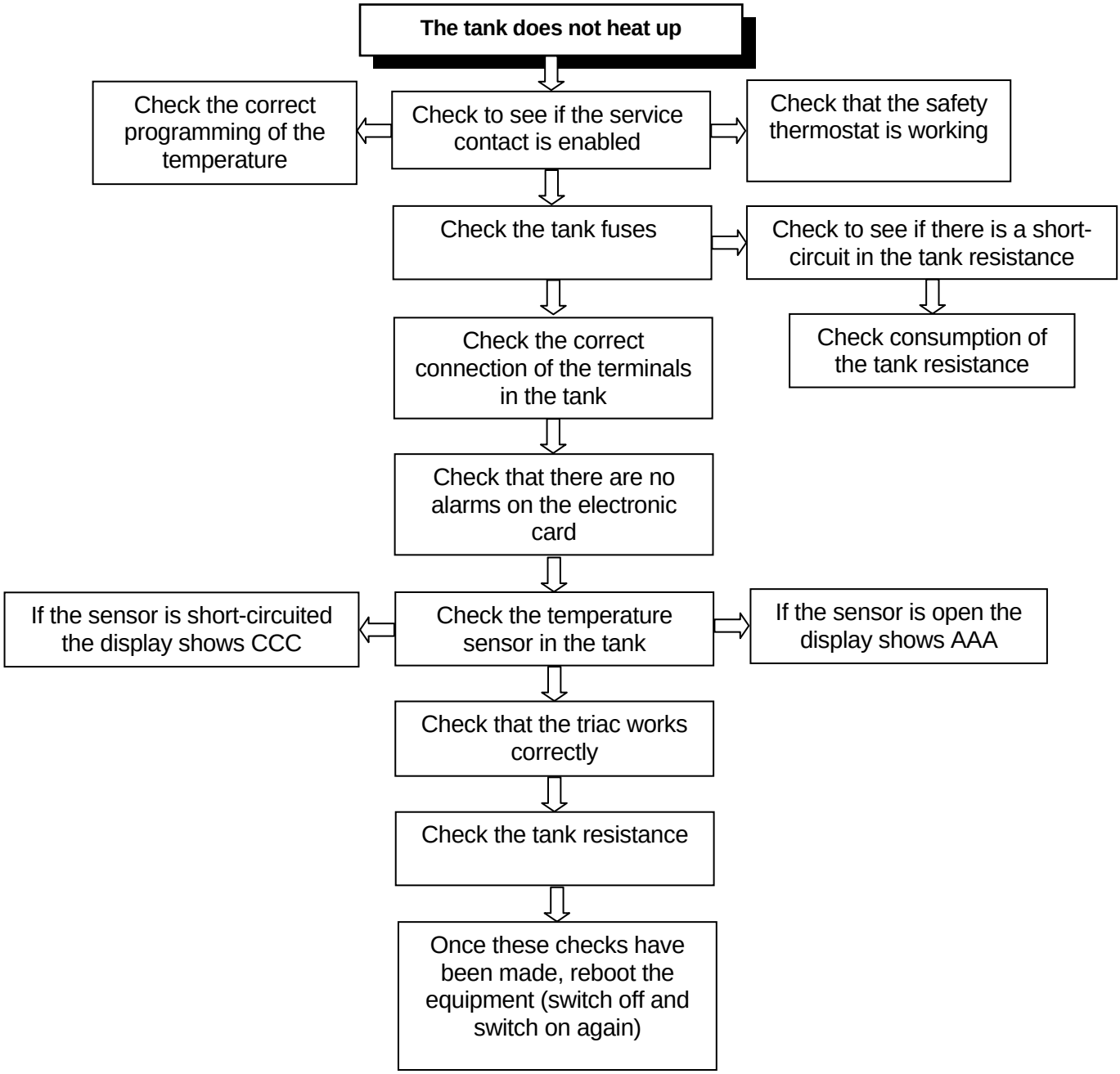

MELTON, S.L.U. - POLIGONO INDUSTRIAL AGUSTINOS CALLE G-34,31160 ORCOYEN, NAVARRA
TEL: 00 34 948 321580 Fax: 00 34 948 326584 e-mail: melton@melton.es http://www.meltonhotmelt.com

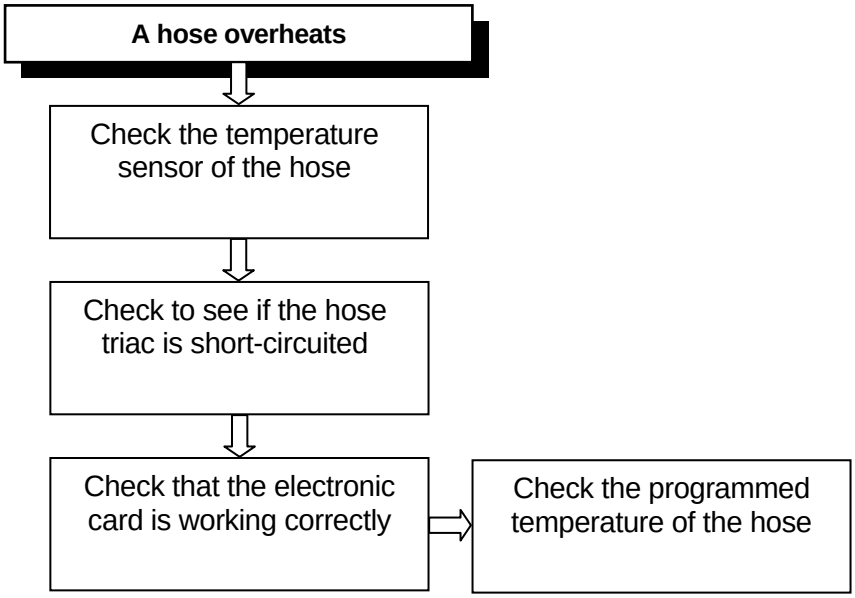

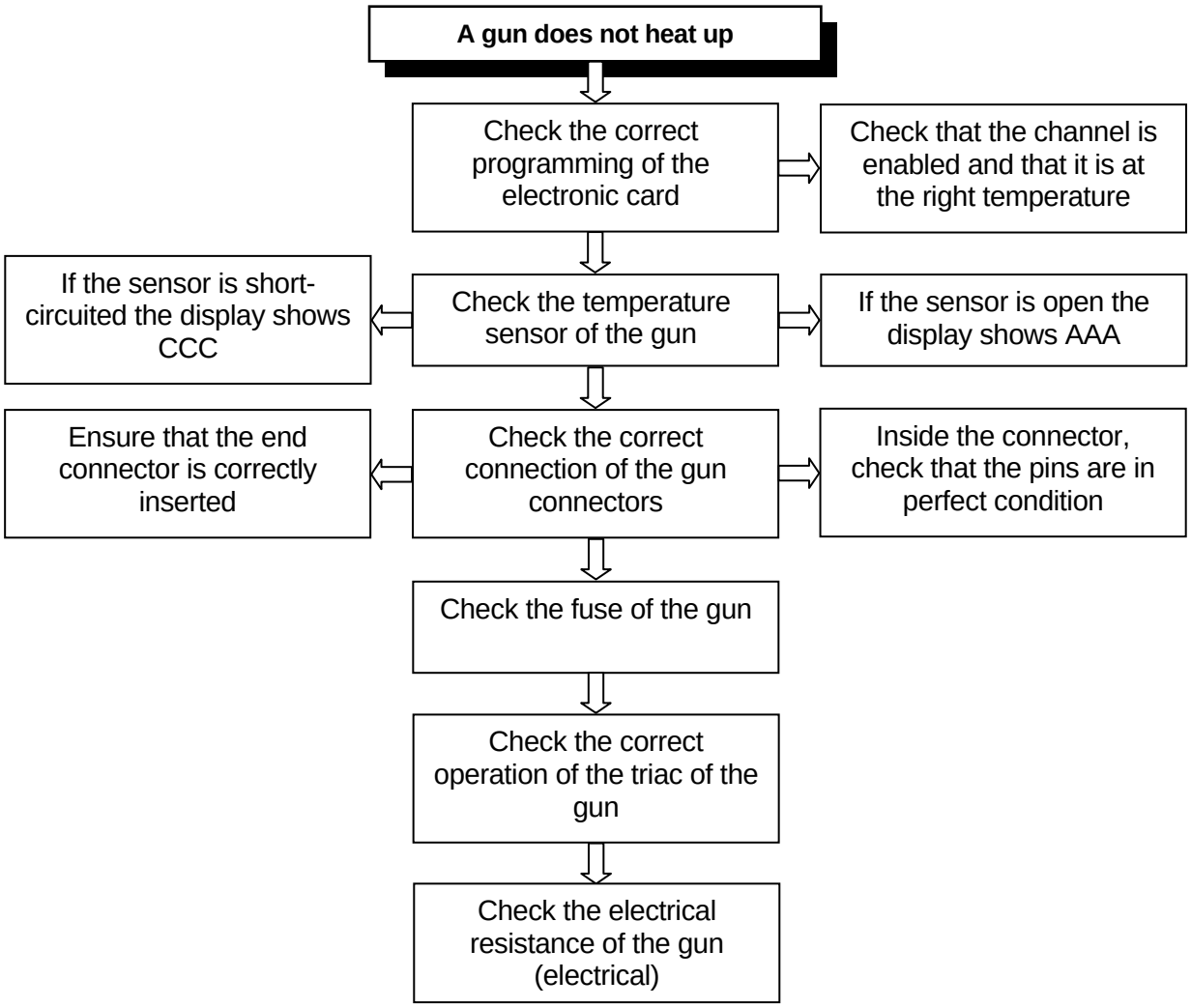

MELTON, S.L.U. - POLIGONO INDUSTRIAL AGUSTINOS CALLE G-34,31160 ORCOYEN, NAVARRA
TEL: 00 34 948 321580 Fax: 00 34 948 326584 e-mail: melton@melton.es http://www.meltonhotmelt.com

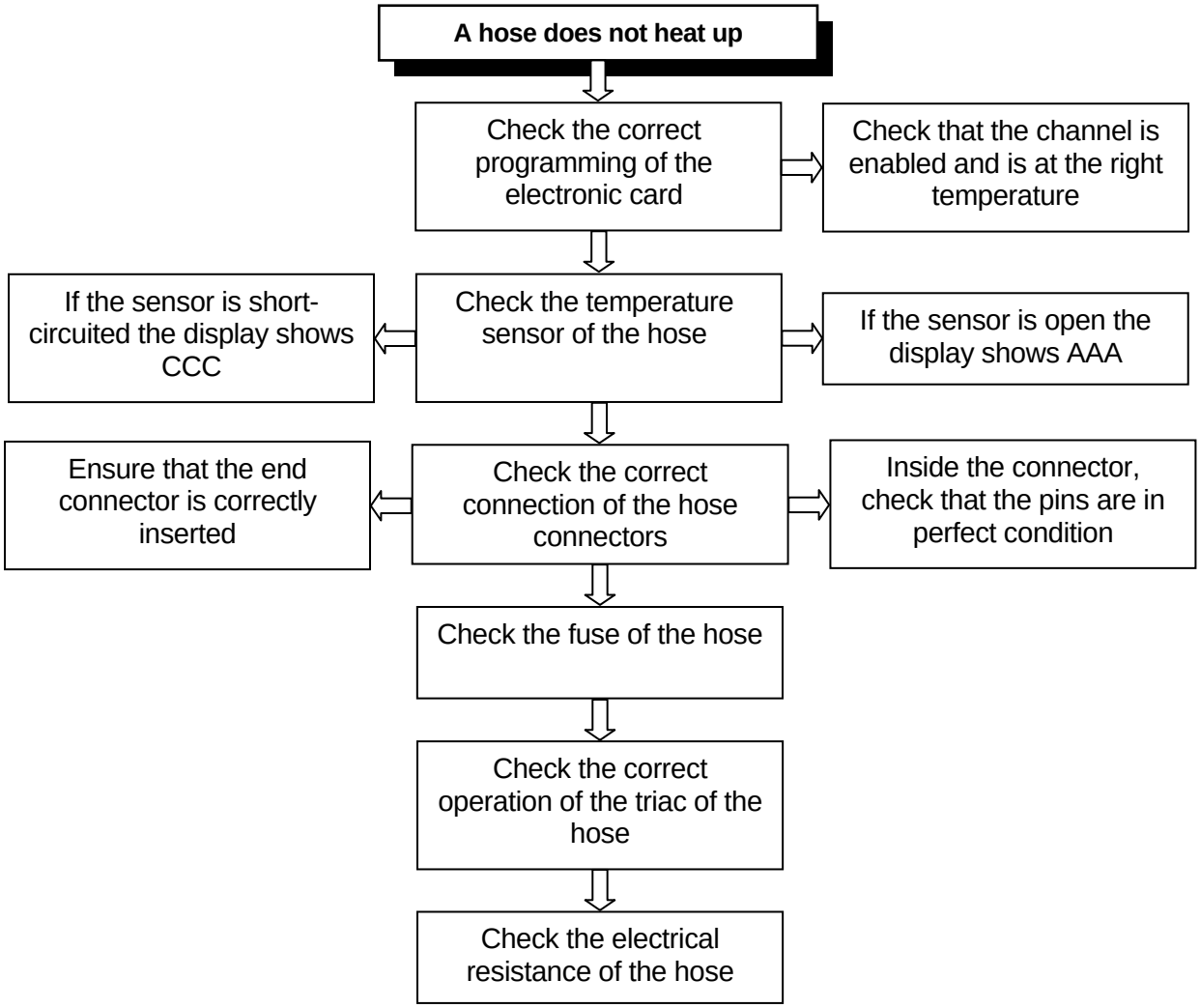

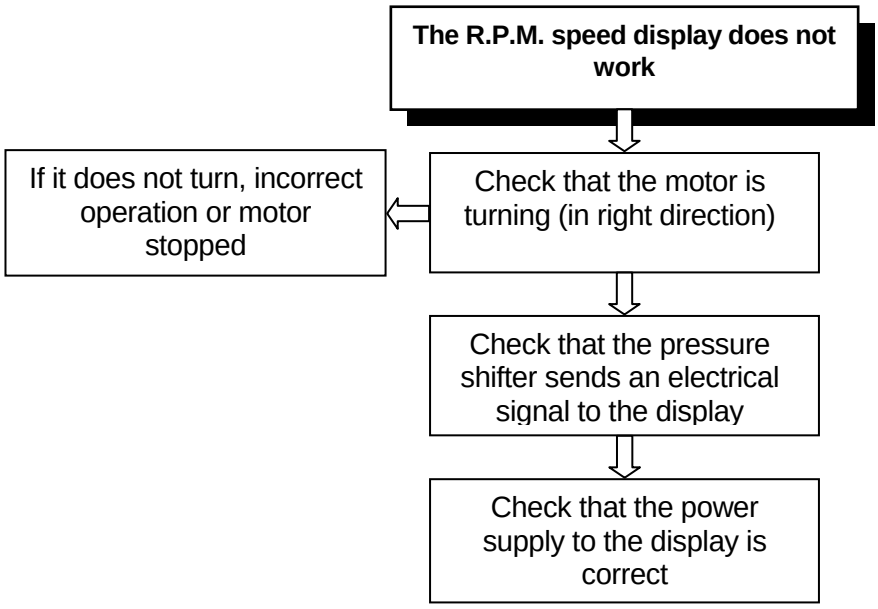

MELTON, S.L.U. - POLIGONO INDUSTRIAL AGUSTINOS CALLE G-34,31160 ORCOYEN, NAVARRA
TEL: 00 34 948 321580 Fax: 00 34 948 326584 e-mail: melton@melton.es http://www.meltonhotmelt.com

7.4. ADHESIVE APPLICATION PROBLEMS:

Cold beads

- Low temperature
- Nozzles far from the surface to be glued

SOLUTION

- Bring nozzles closer
- Raise temperature

Too much glue at the start and end of bead

- Nozzles far from surface to be glued
- Low pump pressure
- Dirty nozzle (blocked)

SOLUTION

- Bring nozzles closer
- Increase pressure
- Clean and unblock nozzle

Bead break

- Adhesive too viscous
- Adhesive cold
- Adhesive old

SULUTION

- Increase temperature
- Increase temperature
- Change the adhesive

MELTON, S.L.U. - POLIGONO INDUSTRIAL AGUSTINOS CALLE G-34,31160 ORCOYEN, NAVARRA
TEL: 00 34 948 321580 Fax: 00 34 948 326584 e-mail: melton@melton.es http://www.meltonhotmelt.com

Adhesive with fine threads

⇩

Applicator far from the surface to be glued — SOLUTION → Bring closer

⇩

Adhesive cold — SOLUTION → Slightly increase the temperature

⇩

Adhesive old — SOLUTION → Fill tank with new adhesive

⇩

Adhesive too viscous — SOLUTION → Slightly increase the temperature

⇩

Draught on the applicator and/or low ambient temperature — SOLUTION → Screen applicator to protect it

SOLUTION

⇩ Slightly increase the temperature of the adhesive

⇩ Warm the ambient air

MELTON, S.L.U. - POLIGONO INDUSTRIAL AGUSTINOS CALLE G-34,31160 ORCOYEN, NAVARRA
TEL: 00 34 948 321580 Fax: 00 34 948 326584 e-mail: melton@melton.es http://www.meltonhotmelt.com

Drops of adhesive in the applicator nozzle

- Hole blocked and/or seat worn or dirty
- Opening of obturators not correctly adjusted
- Incorrect air pressure to obturator drive valves

SOLUTION

- Clean and/or replace dirty and/or worn parts
- Regulate the opening of the obturators
- Adjust air pressure

Frequent obstruction of nozzles

- Rinse the system — **SOLUTION**
- Increase in solids — **SOLUTION**
- Clean filters

SOLUTION

- Change type of adhesive
- Reduce temperature

Too much adhesive flow

- Excessive pump speed
- Flow control valve too open
- Nozzle outlet too large

SOLUTIONS

- Reduce pump speed or open regulator
- Change to a smaller nozzle
- Close by twisting several times

MELTON, S.L.U. - POLIGONO INDUSTRIAL AGUSTINOS CALLE G-34,31160 ORCOYEN, NAVARRA
TEL: 00 34 948 321580 Fax: 00 34 948 326584 e-mail: melton@melton.es http://www.meltonhotmelt.com

Rebounds or splashes of adhesive from the substrate

⇩

Adhesive temperature too high — SOLUTION → Reduce tank temperature

⇩

Air pressure in the pump too high — SOLUTION → Reduce air pressure of the pump

⇩

Viscosity of adhesives too low — SOLUTION → Use nozzle of smaller calibre

SOLUTION

⇩ Reduce temperature

⇩ Use adhesive with higher viscosity

Adhesive smoking

⇩

Applicator far from the surface to be glued — SOLUTION → Reduce temperature

⇩

Adhesive cold

SOLUTION

⇩ Use more stable adhesive

⇩ Keep the tank cover closed

MELTON, S.L.U. - POLIGONO INDUSTRIAL AGUSTINOS CALLE G-34,31160 ORCOYEN, NAVARRA
TEL: 00 34 948 321580 Fax: 00 34 948 326584 e-mail: melton@melton.es http://www.meltonhotmelt.com

Carbonisation of adhesive in the tank

⇩

Tank temperature too high — SOLUTION — Reduce temperature of the tank

⇩

Temperature control fault — SOLUTION — Readjust temperature control or replace card

⇩

Level of adhesive low — SOLUTION — Keep tank full

⇩

Oxidation of the adhesive — SOLUTION — Keep tank cover closed

Gelatinous adhesive

⇩

Overheating — SOLUTION — Reduce the temperature

⇩

Incompatible adhesives mixed together — SOLUTION — Check the compatibility of the adhesives

Empty the system and wash it thoroughly — SOLUTION — Overheating

Empty the system and wash it thoroughly — SOLUTION — Incompatible adhesives mixed together

MELTON, S.L.U. - POLIGONO INDUSTRIAL AGUSTINOS CALLE G-34,31160 ORCOYEN, NAVARRA
TEL: 00 34 948 321580 Fax: 00 34 948 326584 e-mail: melton@melton.es http://www.meltonhotmelt.com

Bubbles in the adhesive

⇩

Tank empty — SOLUTION — Fill the tank and operate applicators until the bubbles disappear

⇩

Adhesive too viscous — SOLUTION — Use an adhesive of lower viscosity

SOLUTION — Slightly increase the temperature

⇩

Humidity in the substrate — SOLUTION — Dry the substrate. Operate applicator until the bubbles disappear

SOLUTION — Check by applying adhesive on dry substrate

⇩

Humidity in the adhesive — SOLUTION — Check for humidity in the adhesive

SOLUTION — Use adhesive that is free of humidity

SOLUTION — Consult the adhesive manufacturer

MELTON, S.L.U. - POLIGONO INDUSTRIAL AGUSTINOS CALLE G-34,31160 ORCOYEN, NAVARRA
TEL: 00 34 948 321580 Fax: 00 34 948 326584 e-mail: melton@melton.es http://www.meltonhotmelt.com

MELTON, S.L.U. - POLIGONO INDUSTRIAL AGUSTINOS CALLE G-34,31160 ORCOYEN, NAVARRA
TEL: 00 34 948 321580 Fax: 00 34 948 326584 e-mail: melton@melton.es http://www.meltonhotmelt.com

CHAPTER 8
EQUIPMENT REPAIR GUIDE

MELTON, S.L.U. - POLIGONO INDUSTRIAL AGUSTINOS CALLE G-34,31160 ORCOYEN, NAVARRA
TEL: 00 34 948 321580 Fax: 00 34 948 326584 e-mail: melton@melton.es http://www.meltonhotmelt.com

WARNING: The maintenance operations described in this chapter should only be performed by qualified personnel understanding the processes and familiar with the safety measures involved.

8.1. INTRODUCTION:

This chapter describes the procedures to remove and change some components. These procedures should be followed during maintenance or repair operations.

First of all, make sure that you are duly protected and follow all safety measures:

1º Switch off the air at the mains.

2º Switch off the main switch.

3º Make sure the electricity is off.

4º Follow applicable safety and health standards.

Chapter 9 includes lists of the parts to which the procedures refer.

8.2. REPAIRING THE PRESSURE REGULATOR:

Proceed as follows to remove / install the regulator.

1º Loosen the regulator screws with a number 5 Allen key and remove the cover.

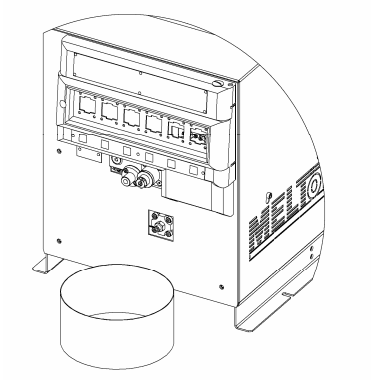

MELTON, S.L.U. - POLIGONO INDUSTRIAL AGUSTINOS CALLE G-34,31160 ORCOYEN, NAVARRA
TEL: 00 34 948 321580 Fax: 00 34 948 326584 e-mail: melton@melton.es http://www.meltonhotmelt.com

2º Remove the regulator with pliers.

3º Dismantle the regulator by pushing the spring needle system from the hole in the tip.

4º Clean all the components and replace faulty ones.

If you use a cleaning agent, make sure that it is compatible with the adhesive employed.

If in doubt, contact the adhesive manufacturer.

5º Re-install by repeating the above procedure in reverse. Change the O-rings and install new ones covered in high temperature lubricant.

8.3. CHANGING THE PUMP:

Before starting to remove the pump, wear goggles, gloves and long sleeves to prevent burns from the glue.

1º Heat the tank until the glue has melted.

2º Stop the motor.

3º Remove the central cover

4º Loosen the M8 screws on each side of the motor and move backwards until the coupling is loose.

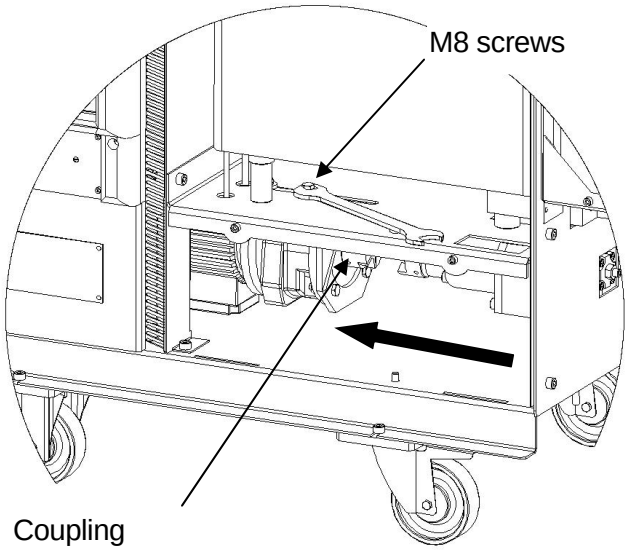

5º Loosen the stud bolts.

MELTON, S.L.U. - POLIGONO INDUSTRIAL AGUSTINOS CALLE G-34,31160 ORCOYEN, NAVARRA
TEL: 00 34 948 321580 Fax: 00 34 948 326584 e-mail: melton@melton.es http://www.meltonhotmelt.com

6º Remove the M8 screws securing the pump.

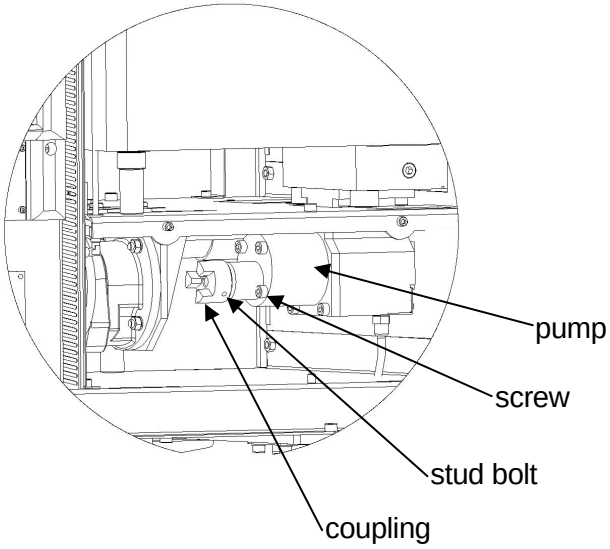

7º Clean all the components and replace faulty ones.

If you use a cleaning agent, make sure that it is compatible with the adhesive employed.

If in doubt, contact the adhesive manufacturer.

8º Install by following the same procedure in reverse. Change the O-rings and install them covered in high-temperature lubricant

MELTON, S.L.U. - POLIGONO INDUSTRIAL AGUSTINOS CALLE G-34,31160 ORCOYEN, NAVARRA
TEL: 00 34 948 321580 Fax: 00 34 948 326584 e-mail: melton@melton.es http://www.meltonhotmelt.com

8.4. REPAIRING ELECTRIC COMPONENTS:

If one of the electric components needs to be repaired, proceed according to the part listings in chapter 9 and the electric diagrams in chapter 10.

All these operations should be performed with the machine switched off at the mains and disconnected from the main air circuit, making sure that the system has been duly bled and depressurised.

MELTON, S.L.U. - POLIGONO INDUSTRIAL AGUSTINOS CALLE G-34,31160 ORCOYEN, NAVARRA
TEL: 00 34 948 321580 Fax: 00 34 948 326584 e-mail: melton@melton.es http://www.meltonhotmelt.com

MELTON, S.L.U. - POLIGONO INDUSTRIAL AGUSTINOS CALLE G-34,31160 ORCOYEN, NAVARRA
TEL: 00 34 948 321580 Fax: 00 34 948 326584 e-mail: melton@melton.es http://www.meltonhotmelt.com

CHAPTER 9
LOG SHEETS

MELTON, S.L.U. - POLIGONO INDUSTRIAL AGUSTINOS CALLE G-34,31160 ORCOYEN, NAVARRA
TEL: 00 34 948 321580 Fax: 00 34 948 326584 e-mail: melton@melton.es http://www.meltonhotmelt.com

DATE	INCIDENCE

MELTON, S.L.U. - POLIGONO INDUSTRIAL AGUSTINOS CALLE G-34,31160 ORCOYEN, NAVARRA
TEL: 00 34 948 321580 Fax: 00 34 948 326584 e-mail: melton@melton.es http://www.meltonhotmelt.com